Polo 1995 ➤

Body self-diagnosis

Edition 10.1999

Protected by copyright. Copying for private or commercial purposes, in part or in whole, is not permitted unless authorised by Volkswagen AG. Volkswagen AG does not guarantee or accept any liability with respect to the correctness of information in this document. Copyright by Volkswagen AG.

satelettronica

List of Workshop Manual Repair GroupsList of Workshop Manual Repair GroupsList of Workshop Manual Repair Groups

Polo 1995 ➤

Body self-diagnosis

Repair Group

01 - Self-diagnosis

satelettronica

Protected by copyright. Copying for private or commercial purposes, in part or in whole, is not permitted unless authorised by Volkswagen AG. Volkswagen AG does not guarantee or accept any liability with respect to the correctness of information in this document. Copyright by Volkswagen AG.

Technical information should always be available to the foremen and mechanics, because their careful and constant adherence to the instructions is essential to ensure vehicle road-worthiness and safety. In addition, the normal basic safety precautions for working on motor vehicles must, as a matter of course, be observed.

All rights reserved.
No reproduction without prior agreement from publisher.

Copyright © 2010 Volkswagen AG, Wolfsburg

Contents

01 - Self-diagnosis 1

1 Self-diagnosis 1
1.1 Self-diagnosis 1
1.2 Tools 1
1.3 Connecting fault reader 2

2 Self-diagnosis of airbag system 5
2.1 Self-diagnosis of airbag system 5
2.2 Function 5
2.3 Coding airbag control unit using fault reader V.A.G 1551 20
2.4 Adaption (deactivating and activating) 22
2.5 Read measured value block 29
2.6 Test box VAS 5056 35
2.7 Final control diagnosis 37

3 Self-diagnosis for convenience system 38
3.1 Self-diagnosis for convenience system 38
3.2 Functional description 38
3.3 Determining which source has possibly triggered the anti-theft alarm 39
3.4 Initiating self-diagnosis for the convenience system 39
3.5 Overview of the selectable functions 40
3.6 Interrogating control unit version 41
3.7 Coding convenience system control unit using fault reader V.A.G 1551 42
3.8 Interrogating fault memory 43
3.9 Erasing fault memory 44
3.10 Ending output 45
3.11 Fault table 46
3.12 Final control diagnosis 48
3.13 Reading measured value block 49
3.14 Display group overview 50
3.15 Matching ignition keys to radio remote control 56
3.16 Matching a new additional key 58
3.17 Radio remote control functional variations 59
3.18 Removing and installing batteries for the main key with radio wave remote control 61

4 Self-diagnosis for the interior monitoring system 63
4.1 Self-diagnosis for the interior monitoring system 63
4.2 Description of the interior monitoring system 63
4.3 Anti-theft alarm system active indicator 63
4.4 Initiating self-diagnosis for the interior monitoring system 63
4.5 Overview of the selectable functions 64
4.6 Interrogating fault memory 65
4.7 Erasing fault memory 66
4.8 Ending output 67
4.9 Fault table 67
4.10 Final control diagnosis 68
4.11 Reading measured value block 70
4.12 Display group overview 71

Protected by copyright. Copying for private or commercial purposes, in part or in whole, is not permitted unless authorised by Volkswagen AG. Volkswagen AG does not guarantee or accept any liability with respect to the correctness of information in this document. Copyright by Volkswagen AG.
satelettronica

Protected by copyright. Copying for private or commercial purposes, in part or in whole, is not permitted unless authorised by Volkswagen AG. Volkswagen AG does not guarantee or accept any liability with respect to the correctness of information in this document. Copyright by Volkswagen AG.

satelettronica

01 - Self-diagnosis

1 - Self-diagnosis

1.1 - Self-diagnosis

1.2 - Tools

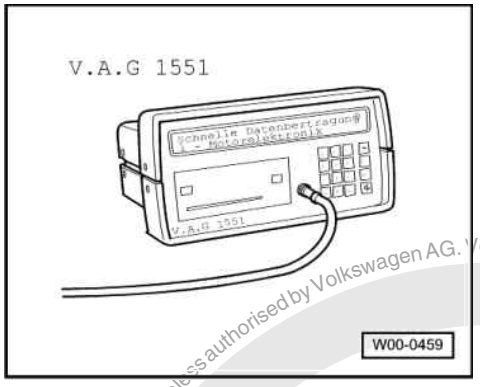

Special tools, workshop equipment, testers, measuring instruments and auxiliary items required

- V.A.G 1551 Fault reader

Note:

The vehicle system tester V.A.G 1552 can be used instead of the fault reader V.A.G 1551, however a print-out is not possible.

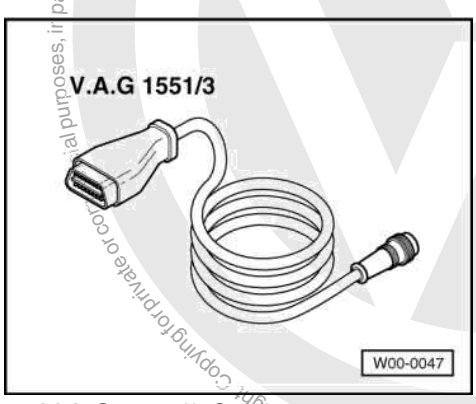

- V.A.G 1551/3 Cable

Protected by copyright. Copying for private or commercial purposes, in part or in whole, is not permitted unless authorised by Volkswagen AG. Volkswagen AG does not guarantee or accept any liability with respect to the correctness of information in this document. Copyright by Volkswagen AG.
satelettronica

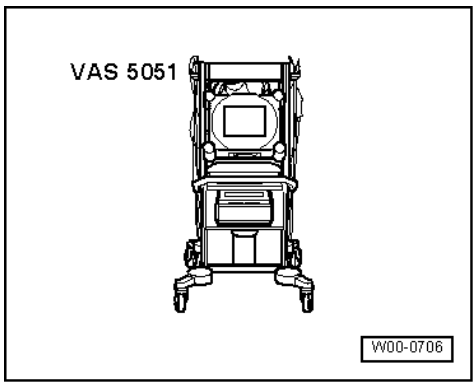

- VAS 5051 Vehicle diagnosis, testing and information system

All functions which could previously be performed with V.A.G 1551/1552 can also be performed with the new tester VAS 5051 in the operating mode vehicle self-diagnosis.

=> Operating instructions for Vehicle Diagnosis, Testing and Information System VAS 5051.

1.3 - Connecting fault reader

Test conditions

- All fuses according to current flow diagram OK.
- Supply voltage OK (at least 9.0 V).

For vehicles up to ▸07.97

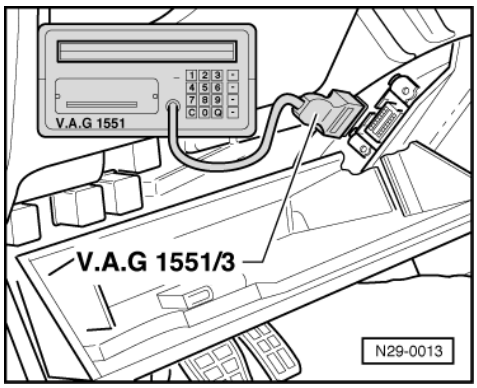

The self-diagnosis connection is located behind the shelf on the driver's side.

- Fold compartment on left-hand side of dash panel down.
- -> With ignition switched off, connect fault reader V.A.G 1551 with diagnosis cable V.A.G 1551/3.

-> Indicated on display:

```
V.A.G 1551     -GB/7.0-     1.01.1997
```

- Display will show the actual software version installed (will be shown briefly in display)

-> Indicated on display:

```
V.A.G self diagnosis     HELP
1-Rapid data transfer*
2-Flash code output*
```

Protected by copyright. Copying for private or commercial purposes, in part or in whole, is not permitted unless authorised by Volkswagen AG. Volkswagen AG does not guarantee or accept any liability with respect to the correctness of information in this document. Copyright by Volkswagen AG.
satelettronica

* Is displayed alternately.

Notes:

- If the display remains blank, check V.A.G 1551 voltage supply according to current flow diagram.

=> Current flow diagrams, Electrical fault finding and Fitting locations binder

- Additional operating information can be printed out depending on the programme by pressing the HELP key of V.A.G 1551.
- The ⇒key is used for advancing the programme sequence.
- The PRINT key is used for switching on the printer (warning lamp in key lights up).

- Switch on ignition.
- Switch on printer with Print button (warning lamp in button lights up).
- Press key -1- for "Rapid data transfer" mode.

-> Indicated on display:

```
Rapid data transfer     HELP
Enter address word XX
```

Note:

With the address word 00 the automatic test sequence is carried out, i.e. the fault memories of all systems in the vehicle capable of self-diagnosis are interrogated via the rapid data transfer.

For vehicles 08.97 ▸

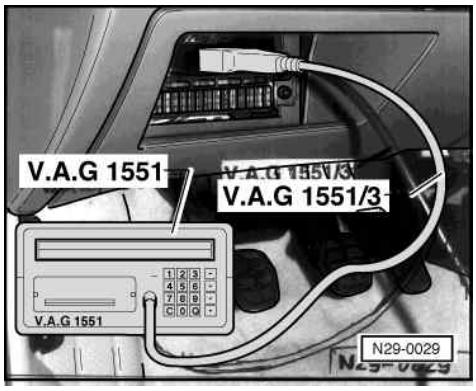

The self-diagnosis connection is located on the fuse strip in front left footwell

- Remove cover in front of fuse strip
- -> With ignition switched off, connect fault reader V.A.G 1551 with diagnosis cable V.A.G 1551/3.

-> Indicated on display:

```
V.A.G 1551     -GB/7.0-     1.01.1997
```

- Display will show the actual software version installed (will be shown briefly in display)

-> Indicated on display:

```
V.A.G self diagnosis     HELP
1-Rapid data transfer*
2-Flash code output*
```

* Is displayed alternately.

For vehicles 10.99 ▸

The self-diagnosis connector is located in the centre console under the ashtray.

Protected by copyright. Copying for private or commercial purposes, in part or in whole, is not permitted unless authorised by Volkswagen AG. Volkswagen AG does not guarantee or accept any liability with respect to the correctness of information in this document. Copyright by Volkswagen AG.
Salelettronica

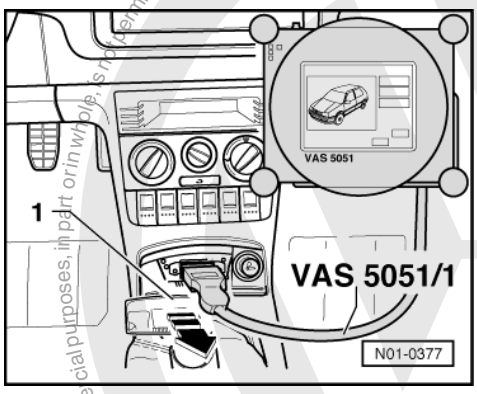

- -> Pull cover -1- off in direction of arrow.
- Fit connector from diagnosis cable VAS 5051/1 or VAS 5051/3 to diagnosis connection.

Selecting operating mode:

- Press button on display for "Vehicle self-diagnosis".

Selecting vehicle system:

- Press button on display for "45 - Interior monitoring".

On the display the control unit identification and coding are displayed.

Selecting diagnosis function:

All diagnostic functions available are indicated on the display.

- Press button on display for desired function.

Notes:

The display zones in functions 04 - Basic setting or 08 - Read measured value block are shown from top to bottom.

The following test sequences are for fault reader V.A.G 1551.

Connecting V.A.G 1551

Special tools, workshop equipment, testers, measuring instruments and auxiliary items required

- V.A.G 1551 Fault reader
- V.A.G 1551/3 Cable

Note:

The vehicle system tester V.A.G 1552 can be used instead of the fault reader V.A.G 1551, however a print-out is not possible.

Work sequence

- Connect fault reader V.A.G 1551 using cable V.A.G 1551/3.

-> Indicated on display:

```
V.A.G 1551     -GB/8.0-     1.10.1998
```

- Display will show the actual software version installed (will be shown briefly in display)

-> Indicated on display:

Protected copyright. Copyright by Volkswagen AG. Volkswagen AG does not guarantee or accept any liability with respect to the correctness of information in this document. Copyright by Volkswagen AG. Reproduction for commercial purposes, in part or in whole, is not permitted unless authorised by Volkswagen AG.
satelettronica

```
V.A.G self diagnosis          HELP
1-Rapid data transfer*
2-Flash code output*
```

* Is displayed alternately.

Notes:

- If the display remains blank, check fault reader voltage supply on diagnostic socket using current flow diagram.

=> Current flow diagrams, Electrical fault finding and Fitting locations binder

- Additional operating information can be printed out depending on the programme by pressing the HELP key of V.A.G 1551.
- The ⇒key is used for advancing the programme sequence.
- The PRINT key is used for switching on the printer (warning lamp in key lights up).

- Switch on ignition.
- Switch on printer with Print button (warning lamp in button lights up).
- Press key -1- for "Rapid data transfer" mode.

-> Indicated on display:

```
Rapid data transfer     HELP
Enter address word XX
```

Note:

With the address word 00 the automatic test sequence is carried out, i.e. the fault memories of all systems in the vehicle capable of self-diagnosis are interrogated via the rapid data transfer.

2 - Self-diagnosis of airbag system

2.1 - Self-diagnosis of airbag system

2.2 - Function

The airbag control unit (J234) is located behind the console on the tunnel. It is equipped with a fault memory.

The control unit detects faults in the airbag system and stores them in a permanent memory.

Faults which can be attributed to a temporary open circuit in the wiring or a loose contact, will also be stored. These faults will be displayed as sporadic faults "SP".

After the ignition is switched on, the airbag warning lamp (K75) comes on for about 4 seconds and then goes out again. If the lamp then flashes for a further 15 seconds this signals that an airbag or seat belt tensioner is disabled.

- If the warning lamp (K75) does not go out after about 4 seconds, then the voltage supply to the airbag control unit (J234) is faulty. Interrogate fault memory => Page 8 .
- A fault is present if the warning lamp (K75) lights up again. Interrogate fault memory => Page 8 .
- If the warning lamp (K75) flashes continuously then the control unit (J234) must be renewed.

To commence fault finding, initiate self-diagnosis and retrieve the stored information with the fault reader V.A.G 1551.

Protected by copyright. Copying for private or commercial purposes, in part or in whole, is not permitted unless authorised by Volkswagen AG. Volkswagen AG does not guarantee or accept any liability with respect to the correctness of information in this document. Copyright by Volkswagen AG.
sateletronica

The fault information displayed is used to refer to a fault table with notes on the possible causes for directed repair measures.

Warning!
Only visual check of wiring!
Do not carry out electrical continuity tests or measurements to igniter circuits!
Only check wiring with ignition switched off!

During test and assembly work, other control units may recognise faults such as e.g. plug disconnected. Therefore, after completing repairs, you must interrogate and erase the fault memories of all control units. To do this:

- Press key 0 twice for address word "Automatic test sequence" and confirm entry with Q key. The V.A.G 1551 transmits all known address words one after the other.

When a control unit answers with its identification the number of stored faults appears on the display or "No fault recognised".

Any system faults that are stored will be displayed one after the other and printed out. The V.A.G 1551 will then transmit the next address word.

-> The automatic test sequence has ended when following is indicated on display:

```
V.A.G SELF-DIAGNOSIS      HELP
1 - Rapid data transfer*
2 - Flash code output*
```

Note:

If a fault is recognised:

- . Rectify fault
- 2. Erase fault memory (function 05).
- 3. Interrogate fault memory again (function 02).

Introducing self-diagnosis for airbag

- Connecting fault reader => Page 2 .

-> Indicated on display:

```
Rapid data transfer      HELP
Enter address word XX
```

- Press keys -1- and -5- (the address word of the vehicle system to be tested "Airbag" is entered with 15).

-> Indicated on display:

```
Rapid data transfer      Q
15 Airbag
```

- Confirm entry with the Q key.

-> Indicated on display (see parts catalogue for latest control unit version).

```
1J0 909 609 A      AIRBAG VW 3 SG
V03
Coding 00068      WSC12345
```

- Press ⇒key.

-> Indicated on display:

```
Rapid data transfer      HELP
Select function XX
```

Protected by copyright. Copying for private or commercial purposes, in part or in whole, is not permitted unless authorised by Volkswagen AG. Volkswagen AG does not guarantee or accept any liability with respect to the correctness of information in this document. Copyright by Volkswagen AG.
satelettronica

Notes:

◆
```
Rapid data transfer      HELP
Control unit does not answer!
```

-> If one of the fault messages opposite appears in the display, the possible causes of the fault can be printed out with the HELP key.

◆
```
Rapid data transfer      HELP
K wire not switching to positive!
```

-> Ignition must be switched on.

◆
```
Rapid data transfer
No signal from control unit!
```

-> Faults have occurred at the start of or during the programme (external influences?).

◆
```
Rapid data transfer
Fault in communication build up
```

-> Check diagnosis wires as well as voltage supply and earth connection.

- After rectifying the possible causes of the fault, once again enter the address word 15 for "Airbag" and confirm with the Q key.

-> Indicated in display after entering the address word 15:

```
Rapid data transfer
Tester sends the address word 15
```

and then the following appears in the display:

-> Indicated on display (see parts catalogue for latest control unit version):

```
6Q0 909 601     A     08 AIRBAG     VW5
- 0003
Coding 12344      WSC12345
```

- Press ⇒key.

-> Indicated on display:

```
Rapid data transfer      HELP
Select function XX
```

List of selectable functions

	Page
01 - Interrogating control unit version	22
02 - Interrogating fault memory	
05 - Erasing fault memory	
06 - Ending output	
07 - Coding control unit	
08 - Reading measured value block	
10 - Adaptation (deactivating and activating)	

Notes:

- ◆ A list of possible functions is printed out after pressing the HELP key.
- ◆ Do not select further functions, which can be printed out after pressing the HELP key.
- ◆ After the function is completed the V.A.G 1551 returns to the following start position:

-> Indicated on display:

```
Rapid data transfer      HELP
Select function XX
```

Protected by copyright. Copying for private or commercial purposes, in whole or in part, is not permitted unless authorised by Volkswagen AG. Volkswagen AG does not guarantee or accept any liability with respect to the correctness of information in this document. Copyright by Volkswagen AG.
satelettronica

Interrogate control unit version

- Connecting fault reader => Page 6 .
- Switch on printer with Print button (warning lamp in button lights up).
- Press keys -0- and -1-.

-> Indicated on display:

```
Rapid data transfer      Q
01-Interrogate control unit version
```

- Confirm entry with the Q key.

Control unit VW3 (example)

-> Indicated on display (see parts catalogue for latest control unit version).

```
1J0 909 609 A      AIRBAG VW 3 SG
V03      □
Coding 00068      WSC12345
```

- Top line Part No. of control unit System designation (AIRBAG VW3 SG V03) S-Side airbag, G-Electr. belt tensioner, V03-Version number
- Lower line Code number Dealership number1)

1)- Will be automatically stored in the control unit when entering the system.

Control unit VW5 (example)

-> Indicated on display (see parts catalogue for latest control unit version).

```
6Q0909605 A      0F AIRBAG      VW5 01
0004 □
Coding 12358      WSC12345
```

- Top line Part No. of control unit (6Q0909605 A Index (0F) System designation (AIRBAG VW5) Version number crash sensor (01) Version number software (0004)
- Lower line Code number Dealership number1)

1)- Will be automatically stored in the control unit when entering the system.

- Press ⇒key.

-> Indicated on display:

```
Rapid data transfer      HELP
Enter address word XX
```

Interrogating fault memory

- Connecting fault reader => Page 6 .
- Switch on printer with Print button (warning lamp in button lights up).
- Press keys -0- and -2- (the function "Interrogate fault memory" is entered with 02).

-> Indicated on display:

```
Rapid data transfer      HELP
Select function XX
```

- Press keys -0- and -2- (the function "Interrogate fault memory" is entered with 02).

-> Indicated on display:

```
Rapid data transfer      Q
02 - Interrogate fault memory
```

Protected by copyright. Copying for private or commercial purposes, in part or in whole, is not permitted unless authorised by Volkswagen AG. Volkswagen AG does not guarantee or accept any liability with respect to the correctness of information in this document. Copyright by Volkswagen AG.
satelettronica

- Confirm entry with the Q key.

-> The number of stored faults appears in the display.

```
X faults recognized!
```

The stored faults are displayed and printed out one after the other.

- Rectify fault(s) with aid of fault table => Page 9 .

-> If "No fault recognised" is displayed the programme will return to the initial position after pressing the ⇒ key.

```
No fault recognised!
```

-> Indicated on display:

```
Rapid data transfer      HELP
Select function XX
```

If something else is displayed:

=> Fault reader operating instructions

- End output (function 06) => Page 20 .
- Switch off ignition and separate diagnostic connections.

Note:

If a fault is recognised:

- 1. Rectify fault.
- 2. Interrogate fault memory (function 02).
- 3. Erase fault memory (function 05).

Fault table

Notes:

- The following table lists all the faults, with the corresponding 5-digit code numbers, that can be recognized by the airbag control unit -J234- and displayed and printed out by the V.A.G 1551 or VAS 5051.
- Fault codes appear only on print-out.
- Some of the text listed will only be displayed on the VAS 5051. Only the code numbers will be printed out on the V.A.G 1551.
- Possible faults are dependent on the relevant vehicle equipment.
- Before replacing a component shown as faulty, check wiring and connections to the component as well as earth connections according to current flow diagram.
- Check all relay plate connections are seated securely.
- When repair has been carried out, the fault memory must always be interrogated again with the fault reader V.A.G 1551 or VAS 5051 and erased.
- In addition, the fault type may also appear in the fault table.

V.A.G 1551 printout	Possible cause of fault	Rectifying fault
00000 No fault recognized	If "No fault recognized" appears after performing repairs, the self-diagnosis is ended.	

V.A.G 1551 printout	Possible cause of fault	Rectifying fault
00532 Supply voltage Signal too large	Alternator faulty	- Test alternator: => Current flow diagrams, Electrical fault finding, Fitting locations

Copyright by Volkswagen AG. Volkswagen AG does not guarantee or accept any liability with respect to the correctness of information in this document. Copyright by Volkswagen AG. Any use for commercial purposes, in whole or in parts, is not permitted unless authorised by Volkswagen AG.
satelettronica

V.A.G 1551 printout	Possible cause of fault	Rectifying fault
Signal too small	Wiring or connections to airbag control unit (J234) Battery discharged or defective	- Test wiring and connections to control unit using current flow diagram - Charge or renew battery

V.A.G 1551 printout	Possible cause of fault	Rectifying fault
00588 Airbag igniter - driver's side (N95) Resistance too high Resistance too low Short to positive Short to earth	Defective wiring or connections Driver's airbag (N95) defective Coil connector with slip ring (F138) defective	- Renew defective wiring or connections - Renew driver's airbag (N95) - Renew coil connector with slip ring; for vehicles with ESP, fitted in a housing together with steering angle sender (G85) - Read measured value block =>Page 29

V.A.G 1551 printout	Possible cause of fault	Rectifying fault
00589 Airbag igniter 1 - passenger's side (N131) Resistance too high Resistance too low Short to positive Short to earth	Defective wiring or connections Front passenger's airbag igniter (N131) defective	- Renew defective wiring or connections - Renew front passenger's airbag unit (N131) - Read measured value block =>Page 29

V.A.G 1551 printout	Possible cause of fault	Rectifying fault
00591 Driver's belt switch Undefined switch position Short to earth Open circuit/short to positive	Defective wiring or connections Driver's belt switch (E24) defective	- Renew defective wiring or connections - Renew driver's belt switch (E24) - Read measured value block =>Page 29

V.A.G 1551 printout	Possible cause of fault	Rectifying fault
00592 Front passenger's belt switch (E25)		

Protected by copyright. Copying for private or commercial purposes, in part or in whole, is not permitted unless authorised by Volkswagen AG. Volkswagen AG does not guarantee or accept any liability with respect to the correctness of information in this document. Copyright by Volkswagen AG.
satelettronica

V.A.G 1551 printout	Possible cause of fault	Rectifying fault
Undefined switch position Short to earth Open circuit/short to positive	Defective wiring or connections Front passenger's belt switch (E25)	- Renew defective wiring or connections - Renew front passenger's belt switch (E25) - Read measured value block =>Page 29

V.A.G 1551 printout	Possible cause of fault	Rectifying fault
00594 Airbag igniter circuit Short circuit	Defective wiring or connections to airbag units	- Read measured value block =>Page 29
00595 Crash data stored		- Renew control unit - Renew triggered airbag units and all damaged components

V.A.G 1551 printout	Possible cause of fault	Rectifying fault
00654 Belt tensioner igniter - driver's side (N153) Resistance too high Resistance too low Short to positive Short to earth	Defective wiring or connectors Driver's side belt tensioner igniter (N153) defective	- Read measured value block =>Page 29 Replace driver's side belt tensioner (N153)

V.A.G 1551 printout	Possible cause of fault	Rectifying fault
00655 Belt tensioner igniter, front passenger's side (N154) Resistance too high Resistance too low Short to positive Short to earth	Defective wiring or connectors Passenger's side belt tensioner igniter (N154) defective	- Read measured value block =>Page 29 Replace passenger's side belt tensioner (N154)

V.A.G 1551 printout	Possible cause of fault	Rectifying fault
01025 Fault warning lamp activation defective	Fault warning lamp defective	- Renew dash panel insert

satelettronica
Protected by copyright. Copying for private or commercial purposes, in part or in whole, is not permitted unless authorised by Volkswagen AG. Volkswagen AG does not guarantee or accept any liability with respect to the correctness of information in this document. Copyright by Volkswagen AG.

V.A.G 1551 printout	Possible cause of fault	Rectifying fault
	Defective wiring or connections Control unit defective	- Renew defective wiring or connections Control unit defective
01044 Control unit incorrectly coded	Control unit not intended for this vehicle	- Install control unit appropriate to vehicle equipment according to parts catalogue

V.A.G 1551 printout	Possible cause of fault	Rectifying fault
01211 Rear belt tensioner igniter, driver's side (N196) Resistance too high Resistance too low Short to positive Short to earth	Defective wiring or connections Rear belt igniter, driver's side (N196) defective	- Renew defective wiring or connections Read measured value block =>Page 29 - Replace rear belt igniter, driver's side (N196)

V.A.G 1551 printout	Possible cause of fault	Rectifying fault
01212 Rear belt tensioner igniter, front passenger's side (N197) Resistance too high Resistance too low Short to positive Short to earth	Defective wiring or connections Rear belt tensioner front passenger's side (N197) defective	- Renew defective wiring or connections Read measured value block =>Page 29 - Renew rear belt tensioner front passenger's side (N197)

V.A.G 1551 printout	Possible cause of fault	Rectifying fault
01214 Crash data belt tensioner stored		- Erase fault memory or renew control unit If belt tensioner has been triggered, you can erase the message "Crash data belt tensioner stored" twice by erasing fault memory. After the belt tensioner has been triggered for the 3rd time, the fault "Control unit defective" will be registered, and the control unit must be renewed. - Renew belt tensioner and all damaged components

V.A.G 1551 printout	Possible cause of fault	Rectifying fault
01217 Driver's, side airbag igniter (N199)		

Protected by copyright. Copying for private or commercial purposes, in part or in whole, is not permitted unless authorised by Volkswagen AG. Volkswagen AG does not guarantee or accept any liability with respect to the correctness of information in this document. Copyright by Volkswagen AG.

satelettronica

V.A.G 1551 printout	Possible cause of fault	Rectifying fault
Resistance too high Resistance too low Short to positive Short to earth	Defective wiring or connections Driver's side, side airbag igniter (N199) defective	- Renew defective wiring or connections Read measured value block =>Page 29 - Renew driver's side, side airbag (N199)

V.A.G 1551 printout	Possible cause of fault	Rectifying fault
01218 Front passenger's, side airbag igniter (N200) Resistance too high Resistance too low Short to positive Short to earth	Defective wiring or connections Passenger's side, side airbag igniter (N200) defective	- Renew defective wiring or connections Read measured value block =>Page 29 - Renew passenger's side, side airbag (N200)

V.A.G 1551 printout	Possible cause of fault	Rectifying fault
01219 Rear side airbag igniter, driver's side (N201) Resistance too high Resistance too low Short to positive Short to earth	Defective wiring or connections Rear side airbag igniter, driver's side (N201) defective	- Renew defective wiring or connections - Renew rear side airbag igniter, driver's side (N201) - Read measured value block =>Page 29

V.A.G 1551 printout	Possible cause of fault	Rectifying fault
01220 Rear side airbag igniter, front passenger's side (N202) Resistance too high Resistance too low Short to positive Short to earth	Defective wiring or connections	- Renew defective wiring or connections

Protected by copyright. Copyright by Volkswagen AG.
Copyright by Volkswagen AG. Volkswagen AG does not guarantee or accept any liability with respect to the correctness of information in this document. Copying for private or commercial purposes, in part or in whole, is not permitted unless authorised by Volkswagen AG.
satelettronica

V.A.G 1551 printout	Possible cause of fault	Rectifying fault
	Rear side airbag igniter, front passenger's side (N202) defective	- Renew rear side airbag igniter, front passenger's side (N202) - Read measured value block =>Page 29

V.A.G 1551 printout	Possible cause of fault	Rectifying fault
01221 Driver's side, side airbag crash sensor (G179) Short to positive Short to earth defective		
	Defective wiring or connections	- Renew defective wiring or connections
	Crash sensor defective Control unit defective	- Renew damaged component
No setting or incorrect setting	Crash sensor not programmed or incorrectly programmed	- Renew crash sensor - Read measured value block =>Page 29

V.A.G 1551 printout	Possible cause of fault	Rectifying fault
01222 Passenger's side, side airbag crash sensor (G180) Short to positive Short to earth Defective		
	Defective wiring or connections	- Renew defective wiring or connections
	Crash sensor defective Control unit defective	- Renew damaged component
No setting or incorrect setting	Crash sensor not programmed or incorrectly programmed	- Renew crash sensor - Read measured value block =>Page 29

V.A.G 1551 printout	Possible cause of fault	Rectifying fault
01224 Control unit does not match vehicle	Control unit does not correspond to vehicle equipment (number of airbags in vehicle)	- Install control unit appropriate to vehicle equipment according to parts catalogue
01226 Crash data side airbag DS stored		- Erase fault memory or renew control unit If side airbag has been triggered, you can erase the message "Crash data side airbag DS stored" twice by erasing fault memory. After the side airbag has been triggered for the 3rd time, the fault "Control unit defective" will be registered, and the control unit must be renewed.

Protected by copyright. Copying for private or commercial purposes, in part or in whole, is not permitted unless authorised by Volkswagen AG. Volkswagen AG does not guarantee or accept any liability with respect to the correctness of information in this document. Copyright by Volkswagen AG.
satelettronica

V.A.G 1551 printout	Possible cause of fault	Rectifying fault
		- Renew airbag unit and all damaged components

V.A.G 1551 printout	Possible cause of fault	Rectifying fault
01227 Crash data side airbag PS stored		- Erase fault memory or renew control unit If side airbag has been triggered, you can erase the message "Crash data side airbag PS stored" twice by erasing fault memory. After the side airbag has been triggered for the 3rd time, the fault "Control unit defective" will be registered, and the control unit must be renewed. - Renew airbag unit and all damaged components

V.A.G 1551 printout	Possible cause of fault	Rectifying fault
01228 Airbag deactivation key switch, FPS (E224) Undefined switch position Short to earth Open circuit	Defective wiring or connections Airbag deactivation key switch, front passenger's side (E224) defective Front passenger's airbag or side airbag defective	- Renew defective wiring or connections - Renew airbag deactivation key switch, front passenger's side (E224) - Renew front passenger's airbag or side airbag - Read measured value block =>Page 29

V.A.G 1551 printout	Possible cause of fault	Rectifying fault
012801) Front passenger's airbag is deactivated	Front passenger's airbag not functional	Control unit was adapted
012811) Driver's airbag is deactivated	Driver's airbag not functional	Control unit was adapted
012841) Driver's side airbag is deactivated	Driver's side airbag not functional	Control unit was adapted
012851) Front passenger's side airbag is deactivated	Passenger's side airbag not functional	Control unit was adapted
012861) Driver's belt tensioner is deactivated	Driver's belt tensioner not functional	Control unit was adapted
012871) Front passenger's belt tensioner is deactivated	Front passenger's belt tensioner not functional	Control unit was adapted

1) The fault message will only be stored in the fault memory when the adaption is activated.

V.A.G 1551 printout	Possible cause of fault	Rectifying fault
01299		

satelettronica

V.A.G 1551 printout	Possible cause of fault	Rectifying fault
Diagnosis interface for data bus		
No communication	Defective wiring or connections Diagnostic interface (J533) defective	- Renew or repair defective wiring or connections Check diagnostic interface (J533) and replace if necessary (replace dash panel insert) => Electrical system self-diagnosis; Repair group 01; Diagnostic interface for data bus Diagnostic interface for data bus
No setting or incorrect setting	Diagnostic interface (J533) in dash panel insert is not coded or incorrectly coded	- Check or perform coding of diagnostic interface (J533) => Electrical system self-diagnosis; Repair group 01; Diagnostic interface for data bus Diagnostic interface for data bus

V.A.G 1551 printout	Possible cause of fault	Rectifying fault
01312 Data bus drive line Defective		
	Defective wiring or connections	- Renew or repair defective wiring or connections => Current flow diagrams, Electrical fault finding and Fitting locations
	Coding of control units is not in order	- Check coding of control units, interrogate fault memories of all control units
	Diagnostic interface (J533) defective	- Check diagnostic interface (J533) and renew if necessary (renew dash panel insert) => Electrical system self-diagnosis; Repair group 01; Diagnostic interface for data bus Diagnostic interface for data bus

V.A.G 1551 printout	Possible cause of fault	Rectifying fault
01317 Control unit in dash panel insert (J285) No communication		
	Defective wiring or connections	- Renew or repair defective wiring or connections
	Coding of control units is not in order	- Check coding of control units, interrogate fault memories of all control units
	Diagnostic interface (J533) defective	- Check diagnostic interface (J533) and renew if necessary (renew dash panel insert) => Electrical system self-diagnosis; Repair group 01; Diagnostic interface for data bus Diagnostic interface for data bus

V.A.G 1551 printout	Possible cause of fault	Rectifying fault
01578 Airbag deactivated warning lamp, front passenger's side (K145) Short to positive Open circuit		

satelettronica
Copyright by Volkswagen AG. Protected by copyright. Copying for private or commercial purposes, in part or in whole, is not permitted unless authorised by Volkswagen AG. Volkswagen AG does not guarantee or accept any liability with respect to the correctness of information in this document.

V.A.G 1551 printout	Possible cause of fault	Rectifying fault
	Defective wiring or connections Airbag deactivated warning lamp, front passenger's side (K145)	- Renew defective wiring or connections - Renew airbag deactivated warning lamp, front passenger's side (K145) - Read measured value block =>Page 29

V.A.G 1551 printout	Possible cause of fault	Rectifying fault
01588 Igniter for driver's head airbag (N 251) Resistance too high Resistance too low Short to positive Short to earth	Defective wiring or connections Head airbag igniter (N251) defective	- Renew defective wiring or connections - Renew head airbag (N251) - Read measured value block =>Page 29

V.A.G 1551 printout	Possible cause of fault	Rectifying fault
01589 Igniter for front passenger's airbag (N252) Resistance too high Resistance too low Short to positive Short to earth	Defective wiring or connections Head airbag igniter (N252) defective	- Renew defective wiring or connections - Renew head airbag (N252) - Read measured value block =>Page 29

V.A.G 1551 printout	Possible cause of fault	Rectifying fault
01590 Battery isolation igniter (N253) Resistance too high Resistance too low Short to positive Short to earth	Defective wiring or connections Battery isolation igniter (N253) defective	- Renew defective wiring or connections - Renew wiring for battery positive and igniter for wiring open circuit

V.A.G 1551 printout	Possible cause of fault	Rectifying fault
016341)		

Protected by copyright. Copying for private or commercial purposes, in part or in whole, is not permitted unless authorised by Volkswagen AG. Volkswagen AG does not guarantee or accept any liability with respect to the correctness of information in this document. Copyright by Volkswagen AG.
satelettronica

V.A.G 1551 printout	Possible cause of fault	Rectifying fault
Igniter for battery detached switched off	Igniter for battery detached not functioning	Control unit was adapted
01635 Crash data for igniter for battery detached stored		- Erase fault memory or renew control unit If the battery is detached you can erase the message "Crash data for igniter for detached battery stored" twice by erasing fault memory. After the battery detached has been triggered for the 3rd time, the fault "Control unit defective" will be registered and the control unit must be renewed. - Repair detached battery and replace all damaged components

1) The fault message will only be stored in the fault memory when the adaption is activated.

V.A.G 1551 printout	Possible cause of fault	Rectifying fault
01638 Rear side airbag crash sensor, driver's side (G256) Short to positive Short to earth defective		
	Defective wiring or connections	- Renew defective wiring or connections
	Crash sensor defective Control unit defective	- Renew damaged component
No setting or incorrect setting	Crash sensor not programmed or incorrectly programmed	- Renew crash sensor
		- Read measured value block =>Page 29

V.A.G 1551 printout	Possible cause of fault	Rectifying fault
01639 Rear side airbag crash sensor, front passenger's side (G257) Short to positive Short to earth defective		
	Defective wiring or connections	- Renew defective wiring or connections
	Crash sensor defective Control unit defective	- Renew damaged component
No setting or incorrect setting	Crash sensor not programmed or incorrectly programmed	- Renew crash sensor
		- Read measured value block =>Page 29

V.A.G 1551 printout	Possible cause of fault	Rectifying fault
016441)		

satelettronica
Protected by copyright. Copying for private or commercial purposes, in part or in whole, is not permitted unless authorised by Volkswagen AG. Volkswagen AG does not guarantee or accept any liability with respect to the correctness of information in this document. Copyright by Volkswagen AG.

V.A.G 1551 printout	Possible cause of fault	Rectifying fault
Rear side airbag on driver's side is deactivated	Rear side airbag on driver's side not functioning	Control unit was adapted
016451) Rear side airbag on front passenger's side is deactivated	Rear side airbag on front passenger's side airbag not functioning	Control unit was adapted
016461) Driver's head airbag is deactivated	Driver's head airbag not functional	Control unit was adapted
016471) Front passenger's head airbag is deactivated	Front passenger's head airbag not functional	Control unit was adapted
016481) Rear belt tensioner on driver's side is deactivated	Rear belt tensioner on driver's side not functioning	Control unit was adapted
016491) Rear belt tensioner on front passenger's side is deactivated	Rear belt tensioner on front passenger's side not functioning	Control unit was adapted

1) The fault message will only be stored in the fault memory when the adaption is activated.

V.A.G 1551 printout	Possible cause of fault	Rectifying fault
01650 Crash data rear side airbag DS stored		- Erase fault memory or renew control unit If side airbag has been triggered, you can erase the message "Crash data rear side airbag DS stored" twice by erasing fault memory. After the side airbag has been triggered for the 3rd time, the fault "Control unit defective" will be registered, and the control unit must be renewed. - Renew airbag unit and all damaged components
01651 Crash data rear side airbag PS stored		- Erase fault memory or renew control unit If side airbag has been triggered, you can erase the message "Crash data rear side airbag PS stored" twice by erasing fault memory. After the side airbag has been triggered for the 3rd time, the fault "Control unit defective" will be registered, and the control unit must be renewed. - Renew airbag unit and all damaged components

V.A.G 1551 printout	Possible cause of fault	Rectifying fault
65535 Control unit defective	Control unit defective	Renew control unit

Erasing fault memory

- Connecting fault reader => Page 6 .
- Switch on printer with Print button (warning lamp in button lights up).

Prerequisites:

- Faults are rectified

Protected by copyright. Copying for private or commercial purposes, in part or in whole, is not permitted unless authorised by Volkswagen AG. Volkswagen AG does not guarantee or accept any liability with respect to the correctness of information in this document. Copyright by Volkswagen AG.

satelettronica

- Fault memory interrogated again

- Press keys -0- and -5- (the function "Erase fault memory" is entered with 05).

-> Indicated on display:

```
Rapid data transfer      Q
05 Erase fault memory
```

- Confirm entry with the Q key.

-> Indicated on display:

```
Rapid data transfer
Fault memory is erased!
```

- Press ⇒ key.

-> Indicated on display:

```
Rapid data transfer      HELP
Select function XX
```

Notes:

```
Warning!
Fault memory is not interrogated
```

-> If this appears in the display, the test sequence is faulty.
- Adhere strictly to test sequence; first of all interrogate fault memory, then erase memory.

End output

- Press keys -0- and -6- to end the output.

-> Indicated on display:

```
Rapid data transfer      Q
06 End output
```

- Confirm entry with the Q key.

-> Indicated on display:

```
Rapid data transfer      HELP
Enter address word XX
```

- Switch off ignition.
- Disconnect connections to fault reader V.A.G 1551.

2.3 - Coding airbag control unit using fault reader V.A.G 1551

Coding is only possible when a new control unit is used.

- Connecting fault reader => Page 6 .
- Switch on printer with Print button (warning lamp in button lights up).

The airbag (K 75) warning lamp lights up continuously.

- Press keys -1- and -5- (the address word of the vehicle system to be tested "Airbag" is entered with 15).

-> Indicated on display:

```
Rapid data transfer      Q
15 Airbag
```

Copyright by Volkswagen AG. Volkswagen AG does not guarantee or accept any liability with respect to the correctness of information in this document. Copyright by Volkswagen AG. Protected by copyright. Copying for private or commercial purposes, in part or in whole, is not permitted unless authorised by Volkswagen AG.
satelettronica

- Confirm entry with the Q key.

-> Indicated on display (see parts catalogue for latest control unit version):

```
6Q0 909 605 A      AIRBAG VW5      -
0003      □
Coding 00000      WSC00000
```

- Press ⇒key.

-> Indicated on display:

```
Rapid data transfer      HELP
Select function XX
```

- Press keys -0- and -7- (with 07 the function "Code control unit" is selected).

-> Indicated on display:

```
Rapid data transfer      Q
07 Code control unit
```

- Confirm entry with the Q key.

-> Indicated on display:

```
Code control unit      Q
Enter code number      XXXXX (0-32000)
```

- Enter code number according to table => Page 22 :
- Confirm entry with the Q key.

-> The control unit identification number with the relevant letter index, code number and workshop code is displayed.

```
6Q0 909 605 A      08      AIRBAG      VW5
-      0003
Coding 12344      WSC 12345
```

If the contents of the display are as shown then the coding is successful.

If the control unit code number entered, is not accepted, then the following will be displayed:

-> Indicated on display (see parts catalogue for latest control unit version):

```
6Q0 909 601      A      AIRBAG      VW5
- 0003
Coding 00000      WSC 00000
```

In this case the control unit has not been programmed with the relevant data for the vehicle.
Coding is then not possible.
The airbag warning lamp (K 75) will not extinguish and lights up continuously.
A check must then be completed to see if the correct control unit for the vehicle has been installed (compare Part No. and letter index), or whether an incorrect code number has been entered.

Ending function:

- Press ⇒key.

-> Indicated on display:

```
Rapid data transfer      HELP
Select function XX
```

- Press keys -0- and -6- to end the output.
- Confirm entry with the Q key.

-> Indicated on display:

```
Rapid data transfer      Q
06 End output
```

Protected by copyright. Copyright by Volkswagen AG. Copying for private or commercial purposes, in any form or medium, is not permitted unless authorised by Volkswagen AG. Volkswagen AG does not guarantee or accept any liability with respect to the correctness of information in this document.
satelettronica

Airbag warning lamp (K75) must go out after approx. 4 seconds.

Overview of airbag control units

Vehicle equipment	Part number	Index	Code number	CAN bus
only driver's airbag	6N0 909 603	P	00080	no
only driver's airbag	1J0 909 603	F	00070	no
only driver's airbag	1C0 909 601	14	12596	yes
only driver's airbag	1C0 909 601	29	12857	yes
only driver's airbag	6Q0 909 601	07	12343	yes
only driver's airbag	6Q0 909 601	14	12596	yes
only driver's airbag	6Q0 909 601	29	12857	yes
driver's and front passenger's airbag	6N0 909 603	T	00084	no
driver's and front passenger's airbag	1J0 909 603	E	00069	no
driver's and front passenger's airbag	1C0 909 601	2A	12865	yes
driver's and front passenger's airbag	1C0 909 601	15	12597	yes
driver's and front passenger's airbag	6Q0 909 601	08	12344	yes
driver's and front passenger's airbag	6Q0 909 601	15	12597	yes
driver's and front passenger's airbag	6Q0 909 601	2A	12865	yes

Vehicle equipment	Part number	Index	Code number	CAN bus
driver's and side airbags, electric belt tensioner	1C0 909 605 A	1B	12610	yes
driver's and side airbags, electric belt tensioner	1C0 909 605 A	2N	12878	yes
driver's and side airbags, electric belt tensioner	6Q0 909 605 A	07	12343	yes
driver's and side airbags, electric belt tensioner	6Q0 909 605 A	2N	12878	yes
driver's and side airbags, electric belt tensioner	6Q0 909 605 A	1B	12610	yes
driver's, front passenger's and side airbag, electric belt tensioner	1C0 909 605 A	1C	12611	yes
driver's, front passenger's and side airbag, electric belt tensioner	1C0 909 605 A	2P	12880	yes
driver's, front passenger's and side airbag, electric belt tensioner	6Q0 909 605 A	08	12344	yes
driver's, front passenger's and side airbag, electric belt tensioner	6Q0 909 605 A	1C	12611	yes
driver's, front passenger's and side airbag, electric belt tensioner	6Q0 909 605 A	2P	12880	yes

2.4 - Adaption (deactivating and activating)

The airbags can be deactivated or activated in the adaption mode.

If airbags are to be deactivated in a vehicle, apart from front passenger's airbag deactivation, permission must be obtained from the manufacturer (customer support).

For example, to enable the use of a rear-facing child seat on the front passenger seat, the front passenger's airbag unit can be deactivated using fault reader V.A.G 1551. As soon as the child seat is no longer required, the front passenger's airbag should be reactivated.

satelettronica

When a front passenger airbag is deactivated, the electrical connection must be disconnected in addition to blocking the control unit software.

The airbag electrical connection for the front passenger airbag must be reconnected before the front passenger airbag is reactivated via the control unit software.

After the airbag unit is deactivated or activated, the registration card (see illustrations catalogue in Technical Service Handbook) must be completed and sent to the relevant distribution centre or importer for registration. Confirmation of the conversion must be entered into service documents.

In Germany, the blocking (deactivating) or reactivation of the system must be checked by an authorised test centre, for example the TÜV and confirmed with an entry in the vehicle documents.

The 2nd registration card must be retained by the customer until the passenger module is reactivated (vehicle wallet).

Protected by copyright. Copying for private or commercial purposes, in part or in whole, is not permitted unless authorised by Volkswagen AG. Volkswagen AG does not guarantee or accept any liability with respect to the correctness of information in this document. Copyright by Volkswagen AG.

satelettronica

Deactivating

- Connect fault reader => Page 2 .
- Switch on ignition.
- Switch on printer with Print button (warning lamp in button lights up).
- Press keys -1- and -0-.

-> Indicated on display:

```
Rapid data transfer      Q
10 - Adaption
```

- Confirm entry with the Q key.

-> Indicated on display:

```
Adaption
Enter channel number XX
```

- Press keys -0- and -1- and confirm with Q key.

-> Indicated on display:

```
Channel 1     Adaption 0
P. airbag activated     WSC 01948
```

- Press ⇒key.

-> Indicated on display:

```
Channel 1     Adaption 0     Q
Enter adaptation value XXXXX
```

- Enter 00001 and confirm with Q key.

-> Indicated on display:

```
Channel 1     Adaption 1
P. airbag blocked     WSC 01948
```

- Press ⇒key.

-> Indicated on display:

```
Channel 1     Adaption 1     Q
Store changed value?
```

- Confirm entry with the Q key.
- If the value is to be stored confirm entry with Q key.
- If the value is not to be stored then erase entry with C key. On the display appears the previous value.

-> Indicated on display:

```
Channel 1     Adaption     1
Amended value is stored
```

- Press ⇒key.

-> Indicated on display:

```
Rapid data transfer     HELP
Select function XX
```

- Press keys -0- and -6- to end output.

-> Indicated on display:

```
Rapid data transfer     Q
06 End output
```

- Confirm entry with the Q key.

The airbag (K75) warning lamp goes out.

- Switch off ignition.
- Separate connection to fault reader V.A.G 1551.

Vehicles ‣ 09.99

In addition to the blocking of the software side of the front passenger airbag there is also the requirement to disconnect the wiring connector to the front passenger airbag module and fit a vehicle specific resistor in the connector.

For the conversion, repair kit 1H0 998 521B up to chassis number XY 279 648 and repair kit 6N0 998 521 from chassis number XY 279 649 are required.

Warning!
Disconnect battery earth strap before working on the electrical system.

Warning!
The mechanic must electrostatically discharge him/herself before the airbag system is touched. This is done by touching an earthed metal object such as water pipe, heater pipe or metal support etc.

- Remove front passenger's airbag unit without separating connections and earth lead.

=> General body repairs, interior; Repair group 69; Airbag; Removing and installing front passenger's airbag unit. Airbag Removing and installing front passenger's airbag unit.

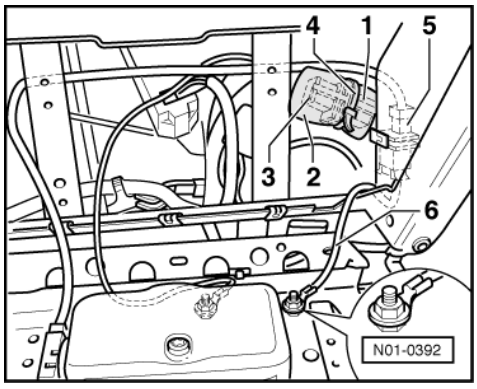

- -> Secure cable -6- at ring connector to front passenger's airbag module housing.
- Separate front passenger's airbag unit connector and connect connector -5- (airbag side) with cable -6-.

Protected by copyright. Copying for private or commercial purposes, in part or in whole, is not permitted unless authorised by Volkswagen AG. Volkswagen AG does not guarantee or assume any liability with respect to the correctness of information in this document. Copyright by Volkswagen AG.
satelettronica

- Insert connector housing -3- (blue resistor connector from repair kit 1H0 998 521B or yellow resistor connector from repair kit 6N0 998 521) in connector -1- of front passenger's airbag (vehicle side).

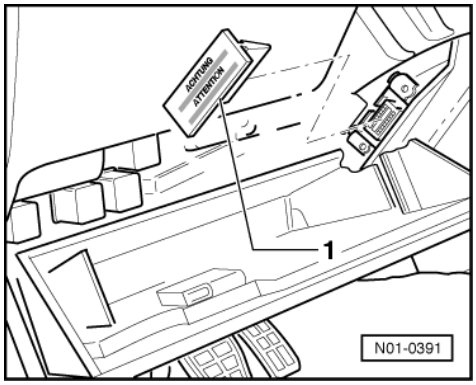

- Install front passenger's airbag unit.

=> General body repairs, interior; Repair group 69; Airbag; Removing and installing front passenger's airbag unit. Airbag Removing and installing front passenger's airbag unit.

- -> Insert notice plate -1- into diagnostic connector (notice plate remains in vehicle until front passenger airbag is reactivated).

Vehicles 10.99 ▸

In addition to the blocking of the software side of the front passenger airbag there is also the requirement to disconnect the wiring connector to the front passenger airbag module.

Warning!
Disconnect battery earth strap before working on the electrical system.

Warning!
The mechanic must electrostatically discharge him/herself before the airbag system is touched. This is done by touching an earthed metal object such as water pipe, heater pipe or metal support etc.

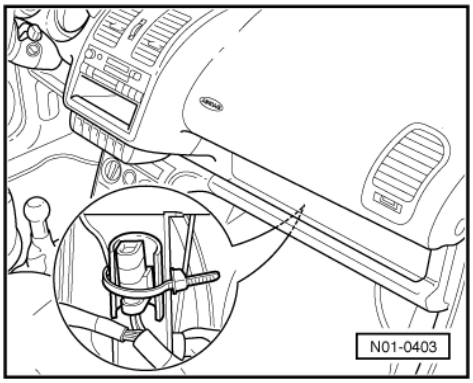

- Remove passenger's stowage compartment

=> General body repairs, interior; Repair group 68; Compartments, covers and trims; Removing passenger's stowage compartment. Compartments, covers and trims Removing passenger's stowage compartment.

- -> Separate connection to front passenger's airbag unit and secure rattle free.
- Install glove box.
- Reconnect battery earth strap.

Protected by copyright. Copying for private or commercial purposes, in part or in whole, is not permitted unless authorised by Volkswagen AG. Volkswagen AG does not guarantee or accept any liability with respect to the correctness of information in this document. Copyright by Volkswagen AG.
satelitónica

Continuation of all vehicles

- Switch on ignition.

The warning lamp (K75) lights up at first for approx. 4 seconds and then flashes for a further approx. 15 seconds. This signalizes that the front passenger's airbag is switched off.

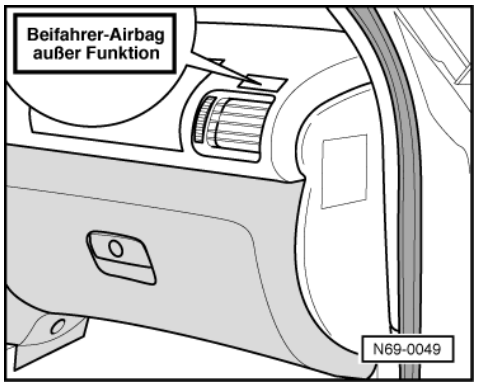

- -> Attach sticker -1- (Front passenger airbag deactivated) above air vent -2- on dash panel.

Activating

- Reinstate electrical connection for front passenger's airbag first.

Vehicles ‣09.99

Warning!
Disconnect battery earth strap before working on the electrical system.

Warning!
The mechanic must electrostatically discharge him/herself before the airbag system is touched. This is done by touching an earthed metal object such as water pipe, heater pipe or metal support etc.

- Remove front passenger's airbag unit.

=> General body repairs, interior; Repair group 69; Airbag; Removing and installing front passenger's airbag unit. Airbag Removing and installing front passenger's airbag unit.

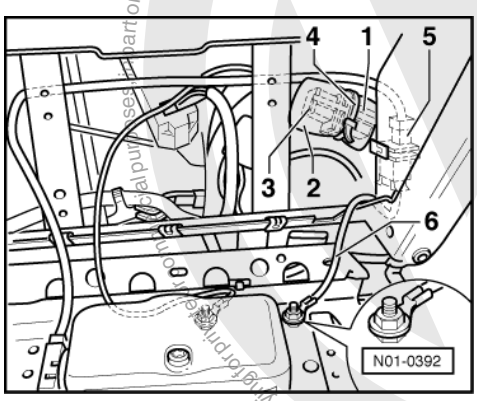

- -> Separate cable tie -4- and free airbag wiring harness.
- Disconnect connector housing -3- (resistor connector blue or yellow) from connector -1-. (Connector housing -3- is no longer fitted).
- Separate connector -5- (airbag side) from cable -6- and connect with connector -1-.
- Remove foam tube from cable.
- Unbolt ring connector of cable -6- from front passenger's airbag module housing.

satelettronica

- Install front passenger's airbag unit.

=> General body repairs, interior; Repair group 69; Airbag; Removing and installing front passenger's airbag. Airbag Removing and installing front passenger's airbag.

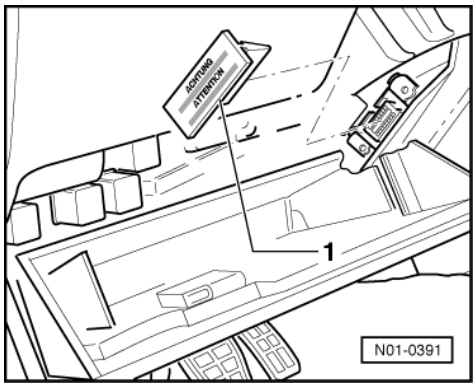

- -> Pull out notice plate -1- from diagnostic connector

Vehicles 10.99 ▸

- Remove passenger's stowage compartment

=> General body repairs, interior; Repair group 68; Compartments, covers and trims; Removing passenger's stowage compartment. Compartments, covers and trims Removing passenger's stowage compartment.

Warning!
Disconnect battery earth strap before working on the electrical system.

Warning!
The mechanic must electrostatically discharge him/herself before the airbag system is touched. This is done by touching an earthed metal object such as water pipe, heater pipe or metal support etc.

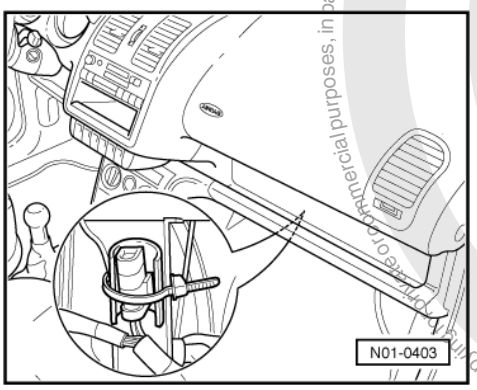

- -> Connect front passenger's airbag unit connections.
- Install glove box.

=> General body repairs, interior; Repair group 68; Compartments, covers and trims; Removing passenger's stowage compartment. Compartments, covers and trims Removing passenger's stowage compartment.

Continuation of all vehicles

- Connect fault reader => Page 2 .
- Switch on ignition.
- Press key -1- for "Rapid data transfer" mode.

-> Indicated on display:

Protected by copyright. Copyright by Volkswagen AG.
Copyright by Volkswagen AG. Volkswagen AG does not guarantee or accept any liability with respect to the correctness of information in this document.
Duplicate or reproduction for commercial purposes, in part or in whole, is not permitted unless authorised by Volkswagen AG.
satelettronica

Protected by copyright. Copying for private or commercial purposes, in part or in whole, is not permitted unless authorised by Volkswagen AG. Volkswagen AG does not guarantee or accept any liability with respect to the correctness of information in this document. Copyright by Volkswagen AG.

```
Rapid data transfer      HELP
Enter address word XX
```

- Press keys -1- and -5- (the address word of the vehicle system to be tested "Airbag" is entered with 15).

-> Indicated on display:

```
Rapid data transfer      Q
15 Airbag
```

- Confirm entry with the Q key.

-> Indicated on display (see parts catalogue for latest control unit version).

```
6Q0 909 601 Y2    AIRBAG     VW 5
V00
Coding 22834     WSC12345
```

- Press ⇒key.

-> Indicated on display:

```
Rapid data transfer      HELP
Select function XX
```

- Press keys -1- and -0-.

-> Indicated on display:

```
Rapid data transfer      Q
10 - Adaption
```

- Confirm entry with the Q key.

-> Indicated on display:

```
Adaption
Enter channel number XX
```

- Press keys -0- and -1- and confirm with Q key.

-> Indicated on display:

```
Channel 1     Adaption 1
P. airbag blocked     WSC 01948
```

- Press ⇒key.

-> Indicated on display:

```
Channel 1.........Adaption     1
Enter matching value XXXXX
```

- Enter 00000 and confirm with Q key.

-> Indicated on display:

```
Channel 1     Adaption 0     Q
P. airbag activated     WSC 01948
```

- Confirm entry with the Q key.

-> Indicated on display:

```
Channel 1     Adaption 0     Q
Store changed value?
```

- If the value is to be stored confirm entry with Q key.

-> Indicated on display:

satelettronica

```
Channel 1     Adaption 0
Changed value is stored
```

- Press ⇒key.

-> Indicated on display:

```
Rapid data transfer     HELP
Select function XX
```

- Press keys -0- and -6- to end the output.

-> Indicated on display:

```
Rapid data transfer     Q
06 End output
```

- Confirm entry with the Q key.

The airbag warning lamp (K75) goes out.

-> Indicated on display:

```
Rapid data transfer     HELP
Enter address word XX
```

- Switch off ignition.
- Separate connection to fault reader V.A.G 1551.
- Switch on ignition.

The airbag warning lamp (K75) lights up and must go out after approx. 4 seconds.

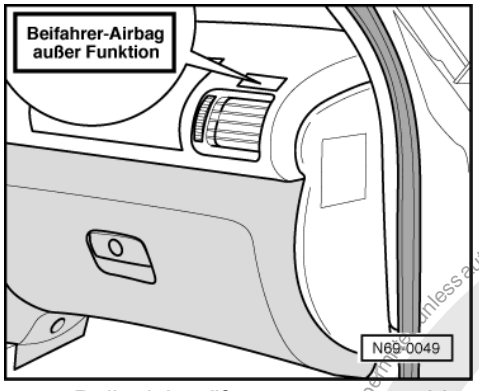

- -> Pull sticker "front passenger airbag inoperative" off dash panel.

2.5 - Read measured value block

Warning!
Only visual check of wiring!
Do not carry out electrical continuity tests or measurements to ignition circuits!
Only check wiring with ignition switched off!

-> Indicated on display:

```
Rapid data transfer     HELP
Select function XX
```

- Press keys -0- and -8- (08 initiates the "Read measured value block" function).

-> Indicated on display:

Protected by copyright. Copying for private or commercial purposes, in part or in whole, is not permitted unless authorised by Volkswagen AG. Volkswagen AG does not guarantee or accept any liability with respect to the correctness of information in this document. Copyright by Volkswagen AG.
satelettronica

```
Rapid data transfer       Q
08 Read measured value block
```

- Confirm entry with the Q key.

-> Indicated on display:

```
Read measured value block     HELP
Input display group number XX
```

- Select relevant display group number and confirm entry with Q key.

-> Indicated on display:
(1...4 = Display zones)

```
Read measured value block     1
"
     1     2     3     4
```

The explanation of the individual display zones on the display is found in the evaluation of display group numbers => Page 31 .

If the displayed values in all display zones are "correct":

- Press ⇒key.

-> Indicated on display:

```
Rapid data transfer      HELP
Select function XX
```

Note:

Interrogate fault memory after completing the function "Read measured value block" => Page 8 .

Display group 001

Display group 001						
Read measured value block 1 ⇒				◂ Indicated on display		
xxxx	xxx	xxx	xxxx			
1	2	3	4	◂ Display zones	Specification	Evaluation
				Igniter, front passenger's belt tensioner (N154)1)	Correct	=> Page 31
				Igniter, driver's belt tensioner (N 153)1)	Correct	
				Igniter, front passenger's airbag	Correct	
				Igniter, driver's airbag	Correct	

1) Only valid for vehicles with electric belt tensioners, the display is not relevant for vehicles with mechanical belt tensioners.

Protected by copyright. Copyright for private or commercial purposes, in part or in whole, is not permitted unless authorised by Volkswagen AG. Volkswagen AG does not guarantee or accept any liability with respect to the correctness of information in this document. Copyright by Volkswagen AG.
satelettronica

Evaluation for display group number 001

Display zone	Designation	Display contents	Rectifying fault
1	Igniter for airbag (driver's side) (N95)	correct trig. earth trig. positive too low	- No faults present Visual check of wiring Watch display and check connectors of appropriate current circuit for correct engagement and tight fit. If display changes to "correct", erase fault memory Pull igniter connector off airbag unit Display changes to "too high" Renew airbag unit Display remains on "too low" Separate connector on coil connector with slip ring Display changes to "too high" Renew coil connector with slip ring Display remains on "too low" Renew wiring harness
			Continued on next page

Display zone	Designation	Display contents	Rectifying fault
1		too high	- Pull igniter connector off airbag unit Fit igniter connector onto inert igniter on VAS 5056 => Page 35 . Display changes to "correct" Renew coil connector with slip ring Display remains on "too high" Press button on VAS 5056 Display changes to "too high" Renew wiring harness
			Continued on next page

Protected by copyright. Copying for private or commercial purposes, in part or in whole, is not permitted unless authorised by Volkswagen AG. Volkswagen AG does not guarantee or accept any liability with respect to the correctness of information in this document. Copyright by Volkswagen AG.
satelettronica

Display zone	Designation	Display contents	Rectifying fault
2	Igniter for airbag (front passenger's) (N131)	correct trig. earth trig. positive too low too high	No faults present Visual check of wiring Watch display and check connectors of appropriate current circuit for correct engagement and tight fit. If display changes to "correct", erase fault memory Separate connector between wiring harness and adapter cable to airbag unit Display changes to "too high" Renew airbag unit Display remains on "too low" Renew wiring harness Connect test box VAS 5056 to passenger's circuit wiring harness => Page 35 . Press button on VAS 5056 Display changes to "too low" Renew airbag unit Display remains on "too high" Renew wiring harness

Display zone	Designation	Display contents	Fault elimination
3	Igniter driver's belt tensioner (N153)1)	Correct Too high Too low Trig. earth Trig. positive	- Visual check of wiring Watch display and check connectors of appropriate current circuit for correct engagement and tight fit. If the display changes to "correct", erase fault memory Replace driver's/front passenger's belt tensioner
4	Igniter front passenger's belt tensioner (N154)1)	Correct Too high Too low Trig. earth Trig. positive	

1) Only valid for vehicles with electric belt tensioners, the display is not relevant for vehicles with mechanical belt tensioners.

Display group (002)1/003

Display group 003						
Read measured value block 3 ⇒				◂ Indicated on display		
xxx	xxx	xxx	xxx			
1	2	3	4	◂ Display zones	Specification	Evaluation
				Front passenger seat belt latch switch (E25)	not fitted	=> Page 33
				Driver seat belt latch switch (E24)	not fitted	
				Front passenger's seat occupied recognition	not fitted	
				Voltage supply	correct	

1) Older control units (VW2) show voltage supply in display group 002

Copyright by Volkswagen AG. Volkswagen AG does not guarantee or accept any liability with respect to the correctness of information in this document. Copying for private or commercial purposes, in part or in whole, is not permitted unless authorised by Volkswagen AG.
satelettronica

Evaluating display group number (002)1/003

Display zone	Designation	Display contents	Rectifying fault
1	Voltage supply	correct too low too high	- Battery voltage min. 9 Volt Check alternator: => Current flow diagrams, Electrical fault finding, Fitting locations Check voltage regulator: => Current flow diagrams, Electrical fault finding, Fitting locations Visual check of wiring
2	Front passenger's seat occupied recognition	not fitted	No fault present
3	Driver seat belt latch switch (E24)	not fitted	
4	Front passenger seat belt latch switch (E25)	not fitted	

1) Older control units (VW2) show voltage supply in display group 002

Display group 005

Display group 005 Read measured value block 5 ⇒				◂ Indicated on display		
xxx	xxx	xxx	xxx	◂ Display zones	Specification	Evaluation
1	2	3	4	Rear side airbag igniter, front passenger's side (N202)	not fitted	
				Rear side airbag igniter, driver's side (N201)	not fitted	
				Front passenger's, side airbag igniter (N200)	correct or not fitted	=> Page 33
				Driver's, side airbag igniter (N199)	correct or not fitted	

Evaluating display group number 005

Display zone	Designation	Display contents	Rectifying fault
1	Driver's side, side airbag igniter (N199)	not fitted correct too high too low trig. earth trig. positive	▪ "Correct" will be displayed if no side airbag is fitted, no fault is present Visual check of wiring Watch display while checking connectors of respective circuit for correct engagement and tight fit. If display changes to "correct", erase fault memory. Renew defective wiring or connections
2	Front passenger's side, side airbag igniter (N200)	not fitted correct too high too low trig. earth trig. positive	- Renew driver's or front passenger's side, side airbag
3	Rear side airbag igniter, driver's side (N201)	not fitted	Fault not present

Copyright by Volkswagen AG. Volkswagen AG does not guarantee or accept any liability with respect to the correctness of information in this document. Copying for private or commercial purposes, in whole or in part, is not permitted unless authorised by Volkswagen AG.
Protected by copyright.
satelettronica

Display zone	Designation	Display contents	Rectifying fault
4	Rear side airbag igniter, front passenger's side (N202)	not fitted	

Display group 007

Display group 007						
Read measured value block 7			⇒	◂ Indicated on display		
xxx	xxx	xxx	xxx			
1	2	3	4	◂ Display zones	Specification	Evaluation
				Empty1)		
			Empty1)			
		Front passenger's head airbag igniter (N252)			not fitted	=> Page 34
	Driver's head airbag igniter (N251)				not fitted	

1) Empty means in this case: Display zone is blank

Evaluating display group number 007

Display zone	Designation	Display contents	Rectifying fault
1	Driver's head airbag igniter (N251)	not fitted	Fault not present
2	Front passenger's head airbag igniter (N252)	not fitted	

Display group 009

Display group 009						
Read measured value block 9			⇒	◂ Indicated on display		
xxx	xxx	xxx	xxx			
1	2	3	4	◂ Display zones	Specification	Evaluation
				Front passenger's side rear, crash sensor identification (G257)	e.g.01 or not fitted	=> Page 35
			Driver's side rear, crash sensor identification (G256)		e.g.01 or not fitted	
		Front passenger's side crash sensor identification (G180)			e.g.01 or not fitted	
	Driver's side crash sensor identification (G179)				e.g.01 or not fitted	

Protected by copyright. Copying for private or commercial purposes, in part or in whole, is not permitted unless authorised by Volkswagen AG. Volkswagen AG does not guarantee or accept any liability with respect to the correctness of information in this document. Copyright by Volkswagen AG.

satelettronica

Evaluating display group number 009

Display zone	Description	Display	Rectifying fault
	Driver's side crash sensor identification (G179)	e.g.01 or not fitted	▪ The identification number displayed for the crash sensor (for side crash) must correspond to the displayed crash sensor version number when the control unit version is displayed => Page 8 If the crash sensor identification number and the displayed version number do not correspond when the control unit identification is displayed, the crash sensors or the control unit must be renewed respectively
	Front passenger's side crash sensor identification (G180)	e.g.01 or not fitted	
	Driver's side rear crash sensor identification (G256)	e.g.01 or not fitted	
	Front passenger's side rear, crash sensor identification (G257)	e.g.01 or not fitted	

2.6 - Test box VAS 5056

It is possible to check the individual components of the airbag system with test box VAS 5056 and to check which components are actually defective.

Note:

- Observe safety measures when working on airbag.

=> General body repairs, interior; Repair group 69; Airbag; Safety measures when working on airbag Airbag Safety measures when working on airbag

Connecting test box to driver's airbag components

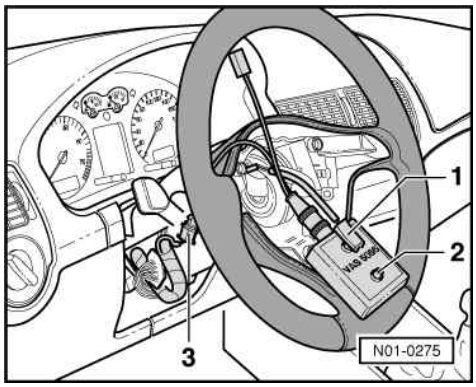

Driver's airbag and steering column switch lower trim removed.

- -> Connect igniter connector to inert igniter -1- and separate wiring harness to coil connector with slip ring. Connect connector -3- from VAS 5056/2 with airbag wiring harness.

Copyright by Volkswagen AG. Volkswagen AG does not guarantee or accept any liability with respect to the correctness of information in this document. Copying for private or commercial purposes, in part or in whole, is not permitted unless authorised by Volkswagen AG.
satelettronica

1 - Igniter connector on inert igniter
2 - Button
3 - Coil connector with slip ring connector

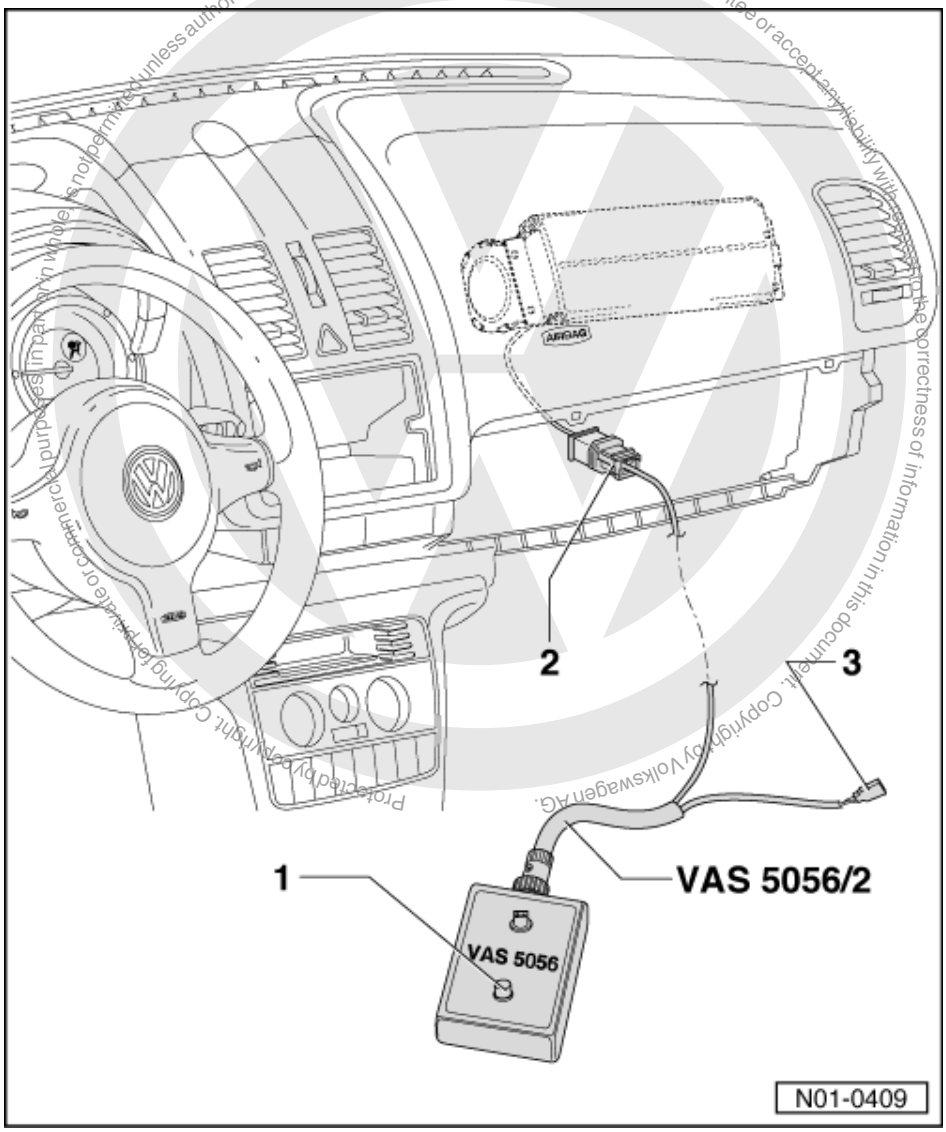

Protected by copyright. Copying for private or commercial purposes, in part or in whole, is not permitted unless authorised by Volkswagen AG. Volkswagen AG does not guarantee or accept any liability with respect to the correctness of information in this document. Copyright by Volkswagen AG.

satelettronica

Connecting test box to passenger's airbag components

- Unscrew front passenger's stowage compartment

=> General body repairs, interior; Repair group 68; Stowage compartments, covers and trims; Removing glove box Stowage compartments, covers and trims Removing glove box

- Separate wiring harness to airbag unit and connect yellow 2-pin connector -2- from VAS 5056/2 with wiring harness/front passenger's airbag.

1 Button
2 Wiring harness/passenger's airbag connector
3 Connector (not relevant)

2.7 - Final control diagnosis

The function "Crash output" is checked with Final Control Diagnosis.

When airbags are ignited the central locking is switched to "unlock", the interior lights are switched "on" and the engine switched off.

Notes:

- Before performing the Final Control Diagnosis, switch central locking to "lock" (operate interior lock switch).
- Switch interior light switch to position "door contact".
- Start engine.
- After completing the Final Control Diagnosis the central locking controls are not active until the ignition has been switched off and on again.

- Connecting fault reader => Page 2 .

Perform function "03 Final Control Diagnosis"

-> Indicated on display:

```
Rapid data transfer     HELP
Select function XX
```

- Press keys 0 and 3

-> Indicated on display:

```
Rapid data transfer     Q
03 Final control diagnosis
```

- Confirm entry with the Q key.

-> Indicated on display:

```
Final control diagnosis
Unlock central locking signal
```

The engine stops, the central locking must switch to "unlock" and the interior lights must switch "on".

-> Indicated on display:

```
Final control diagnosis     -
END
```

- Press ⇒key.

During test and assembly work faults can be recognised from other control units like e.g. plug disconnected. Therefore on completion the fault memories of all control units must be interrogated and erased. To do this:

- Press key 0 twice for address word "Automatic test sequence" and confirm entry with Q key. The V.A.G 1551 transmits all known address words one after the other.

When a control unit answers with its identification the number of stored faults appears on the display or "No fault recognised".

Any system faults that are stored will be displayed one after the other and printed out. The V.A.G 1551 will then transmit the next address word.

-> The automatic test sequence has ended when following is indicated on display:

```
V.A.G SELF-DIAGNOSIS     HELP
1 - Rapid data transfer*
2 - Flash code output*
```

Protected by copyright. Copying for private or commercial purposes, in part or in whole, is not permitted unless authorised by Volkswagen AG. Volkswagen AG does not guarantee or accept any liability with respect to the correctness of information in this document. Copyright by Volkswagen AG.
satelettronica

Note:

If a fault is recognised:

- . Rectify fault
- 2. Erase fault memory (function 05).
- 3. Interrogate fault memory again (function 02).

3 - Self-diagnosis for convenience system

3.1 - Self-diagnosis for convenience system

3.2 - Functional description

The central locking operates pneumatically.

The locking units located in the doors (door locks) have positioning elements, which are controlled by a dual pressure pump.

The positioning elements lock the doors. After locking at an external lock (door lock, tailgate, radio remote control) the vehicle is protected against theft. The feedback on the respective condition in the control unit occurs via the contact switch in the locking unit.

All the known convenience functions can be performed with the electric convenience system, interior lights control, ATA with interior monitoring (see description of system on page 63), electric windows, mirror and the radio remote control.

If the airbag control unit is triggered, a signal is sent to the convenience control unit to unlock the doors.

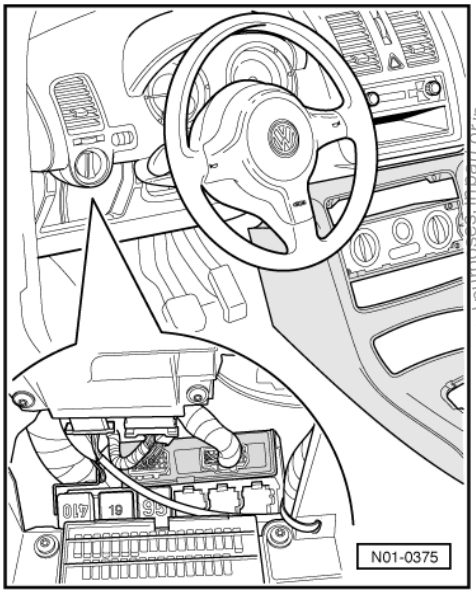

-> The convenience system control unit (J393) is located under the dash panel and is secured with a bracket above the central electrics. It is equipped with a fault memory. The self-diagnosis connection is located in the centre console.

satelettronica

The control unit recognizes faults and malfunctions in the central locking convenience system (convenience system includes central locking, anti-theft alarm, radio wave remote control) and stores them in a non-volatile memory.

Testers V.A.G 1551 and 1552 can be used to interrogate the fault memories and code the control units as well as the function self-diagnosis of the VAS 5051.

The fault information displayed is used to refer to a fault table with notes on the possible causes for directed repair measures.

Faults which can be attributed to a temporary open circuit in the wiring or a loose contact, will also be stored. These faults will be displayed as sporadic faults "SP".

Only statistical faults are considered:

- Central locking inoperative

Note:

Before changing a component erase fault memory, perform functional checks and interrogate fault memory again.

3.3 - Determining which source has possibly triggered the anti-theft alarm

The breakdown of the display content illustrated on Page 54 for the display group number 15 gives information as to which component triggered the alarm system last, and can therefore help the fault finding/ rectification.

This "fault memory" cannot be erased.

3.4 - Initiating self-diagnosis for the convenience system

Test prerequisites:

- Voltage supply and fuses S111 and S144 for the respective system OK.
- To initiate the self-diagnosis the ignition must be switched on "Terminal 15 on".

Notes:

- If the display remains blank, check V.A.G 1551 voltage supply according to current flow diagram.

=> Current flow diagrams, Electrical fault finding and Fitting locations binder

- Additional operating information can be printed out depending on the programme by pressing the HELP key of V.A.G 1551.
- The ⇒key is used for advancing the programme sequence.
- The PRINT key is used for switching on the printer (warning lamp in key lights up).

- Connect fault reader => Page 2 .
- Switch on ignition.
- Switch on printer with Print button (warning lamp in button lights up).
- Press key -1- for "Rapid data transfer" mode.

-> Indicated on display:

```
Rapid data transfer      HELP
Enter address word XX
```

Protected by copyright. Copyright by Volkswagen AG.
Copyright by Volkswagen AG. Volkswagen AG does not guarantee or accept any liability with respect to the correctness of information in this document. Copyright by Volkswagen AG.
Commercial purposes, in part or in whole, is not permitted unless authorised by Volkswagen AG.
satelettronica

Address word for the convenience system: 46

-> Indicated on display:

```
Rapid data transfer      HELP
Enter address word XX
```

- Press keys -4- and -6-.

-> Indicated on display after entering the address word 46:

```
Rapid data transfer      Q
46 Convenience system
```

- Confirm entry with the Q key.

and then the following appears in the display:

-> Indicated on display:

```
Rapid data transfer
Tester sends the address word 46
```

-> Will appear briefly in display:

```
Please wait
```

and then the following appears in the display:

-> The control unit identification of the convenience central control unit (Conv. cent. CU) will be shown on the fault reader V.A.G 1551 display, e.g.:

```
6N0959799 7D Conv. cent. CU      0001
Coding XXXXX      WSC XXXXX
```

At this point the programme can be advanced with the C key to the option "Rapid data transfer, select function".

- Press ⇒key.

-> Indicated on display:

```
Rapid data transfer      HELP
Select function XX
```

3.5 - Overview of the selectable functions

	Page
01 - Interrogating control unit version	56
02 - Interrogating fault memory	
03 - Final control diagnosis	
05 - Erasing fault memory	
06 - Ending output	
07 - Coding control unit	
08 - Read measured value block	
10 - Adaption	

Notes:

- A list of possible functions is printed out after pressing the HELP key.
- Do not select further functions, which can be printed out after pressing the HELP key.
- After the function is completed the V.A.G 1551 returns to the following start position:

-> Indicated on display:

```
Rapid data transfer      HELP
Select function XX
```

Protected by copyright. Copying for private or commercial purposes, in part or in whole, is not permitted unless authorised by Volkswagen AG. Volkswagen AG does not guarantee or accept any liability with respect to the correctness of information in this document. Copyright by Volkswagen AG.
satelettronica

3.6 - Interrogating control unit version

- Connecting fault reader => Page 39 .
- Switch on ignition.
- Press key -1- for "Rapid data transfer" mode.
- Switch on printer with Print button (warning lamp in button lights up).
- Press keys -0- and -1-.

-> Indicated on display:

```
Rapid data transfer      Q
01-Interrogating control unit version
```

- Confirm entry with the Q key.

-> Will appear briefly in display:

```
Please wait
```

and then the following appears in the display:

-> The control unit identification of the convenience central control unit (Conv. cent. CU) will be shown on the fault reader V.A.G 1551 display, e.g.:

```
6N0959799 7D Conv. cent. CU     0001
Coding XXXXX     WSC XXXXX
```

Breakdown of the display:

- Top line Part No. of control unit System designation (032) Conv. cent. CU 0001)
- Lower line Code number Dealership number1)

1) Automatically stored in the control unit when interrogating the system.

2) A number or number/letter combination (03 or 6Q, or others) indicate a correct programming of the control unit.

- Press ⇒key.

-> Indicated on display:

```
Rapid data transfer      HELP
Select function XX
```

Notes:

```
Rapid data transfer      HELP
Control unit does not answer!
```

-> If one of the fault messages opposite appears in the display, the possible causes of the fault can be printed out with the HELP key.

```
Rapid data transfer      HELP
K wire not switching to positive!
```

-> Ignition must be switched on.

```
Rapid data transfer
No signal from control unit!
```

-> Faults have occurred at the start of or during the programme (external interference?).

```
Rapid data transfer
Fault in communication build up
```

-> Check diagnosis wires as well as voltage supply and earth connection.

- Press keys -0- and -6- to end the output.

Protected by copyright. Copyright by Volkswagen AG. Volkswagen AG does not guarantee or accept any liability with respect to the correctness of information in this document. Copyright by Volkswagen AG. Reproduction, in whole or in part, for private or commercial purposes, is not permitted unless authorised by Volkswagen AG.
satelettronica

-> Indicated on display:

```
Rapid data transfer      Q
06 End output
```

- Confirm entry with the Q key.

-> Indicated on display:

```
Rapid data transfer      HELP
Enter address word XX
```

- Switch off ignition.
- Disconnect connector to fault reader V.A.G 1551.

3.7 - Coding convenience system control unit using fault reader V.A.G 1551

Notes:

- When supplied the control unit is precoded according to the vehicle equipment.
- The coding is performed with the fault reader V.A.G 1551=>Page 42 .

- Connecting fault reader => Page 39 .

-> Indicated on display:

```
Rapid data transfer      HELP
Select function XX
```

- Press keys -0- and -7- (with 07 the function "Code control unit" is selected).

-> Indicated on display:

```
Rapid data transfer      Q
07 Code control unit
```

- Confirm entry with the Q key.

-> Indicated on display:

```
Code control unit      Q
Enter code number      XXXXX (0-32767)
```

- Enter code number according to table:

Coding table

Vehicle equipment		Code number
Central locking	All door opening	04097

The central locking can be set to individual door operation

=> General body repairs, exterior; Repair group 57; Central locking Central locking

- Confirm entry with the Q key.

-> The control unit identification number will be displayed with the appropriate index letter, the code number and the workshop code.

```
6N0959799 7D      Conv. cent. CU
0001
Coding XXXXX      WSC XXXXX
```

If the contents of the display are as shown then the coding is successful.

Protected by copyright. Copyright by Volkswagen AG. Volkswagen AG does not guarantee or accept any liability with respect to the correctness of information in this document. Copyright by Volkswagen AG.
satelettronica

If the code number entered is not accepted by the control unit, the previous coding will appear in the display:

-> Indicated on display:

```
6N0959799 7D      Conv. cent. CU
0001
Coding XXXXX      WSC XXXXX
```

In this case the control unit has not been programmed with the relevant data for the vehicle.
A check must then be completed to see if the correct control unit for the vehicle has been installed (compare Part No. and letter index), or whether an incorrect code number has been entered.

- Repeat coding.

If the control unit cannot be coded (correct control unit, correct code number), the control unit is defective.

Furthermore, at this point the door control unit is called-up and checked.

Ending function:

- Press ⇒key.

-> Indicated on display:

```
Rapid data transfer      HELP
Select function XX
```

- Press keys -0- and -6- to end the output.

-> Indicated on display:

```
Rapid data transfer      Q
06 End output
```

- Confirm entry with the Q key.

-> Indicated on display:

```
Rapid data transfer      HELP
Enter address word XX
```

- Switch off ignition.
- Disconnect connector to fault reader V.A.G 1551.

3.8 - Interrogating fault memory

Note:

The vehicle system tester V.A.G 1552 can be used instead of the fault reader V.A.G 1551, however a print-out is not possible.

- Connecting fault reader => Page 39 .
- Switch on printer with Print button (warning lamp in button lights up).

-> Indicated on display:

```
Rapid data transfer      HELP
Select function XX
```

- Press keys -0- and -2- (the function "Interrogate fault memory" is entered with 02).

-> Indicated on display:

```
Rapid data transfer      Q
02 - Interrogate fault memory
```

Protected by copyright. Copying for private or commercial purposes, in part or in whole, is not permitted unless authorised by Volkswagen AG. Volkswagen AG does not guarantee or accept any liability with respect to the correctness of information in this document. Copyright by Volkswagen AG.
satelettronica

- Press Print key
- Confirm entry with the Q key.

-> The number of stored faults appears in the display.

```
X faults recognized!
```

The stored faults are displayed and printed out one after the other.

Note:

If a fault is recognised:

- . Rectify fault
- 2. Erase fault memory (function 05).
- 3. Interrogate fault memory again (function 02).

- The faults printed out can be rectified with aid of fault table => from page 46 .
- The function "Read measured value block" => Page 50 are additional aids.

The measured value block is divided into 17 display group numbers. But only the measured value blocks described in the Workshop Manual are of importance. The assignment of the individual display zones can be taken from the display group overview from Page 50 .

If "No fault recognised" is displayed the programme will return to the initial position after pressing the ⇒ key.

```
No fault recognised!
```

-> Indicated on display:

```
Rapid data transfer      HELP
Select function XX
```

If something else is displayed:

=> Fault reader operating instructions

- Press keys -0- and -6- to end the output.

-> Indicated on display:

```
Rapid data transfer      Q
06 End output
```

- Confirm entry with the Q key.

-> Indicated on display:

```
Rapid data transfer      HELP
Enter address word XX
```

- Switch off ignition.
- Disconnect connector to fault reader V.A.G 1551.

3.9 - Erasing fault memory

Note:

The vehicle system tester V.A.G 1552 can be used instead of the fault reader V.A.G 1551, however a print-out is not possible.

- Connecting fault reader => Page 39 .

Protected by copyright. Copying for private or commercial purposes, in part or in whole, is not permitted unless authorised by Volkswagen AG. Volkswagen AG does not guarantee or accept any liability with respect to the correctness of information in this document. Copyright by Volkswagen AG.
satelettronica

Prerequisites:

- Faults are rectified
- Functional check has been carried out
- Fault memory interrogated again

-> Indicated on display:

```
Rapid data transfer      HELP
Select function XX
```

- Press keys -0- and -5- (the function "Erase fault memory" is entered with 05).

-> Indicated on display:

```
Rapid data transfer      Q
05 Erase fault memory
```

- Confirm entry with the Q key.

-> Indicated on display:

```
Rapid data transfer
Fault memory is erased!
```

- Press ⇒key.

-> Indicated on display:

```
Rapid data transfer      HELP
Select function XX
```

Notes:

```
Warning!
Fault memory was not interrogated
```

-> If this appears in the display, the test sequence is faulty.

- Adhere strictly to test sequence; first of all interrogate fault memory, then erase memory.

- Press keys -0- and -6- to end the output.

-> Indicated on display:

```
Rapid data transfer      Q
06 End output
```

- Confirm entry with the Q key.

-> Indicated on display:

```
Rapid data transfer      HELP
Enter address word XX
```

- Switch off ignition.
- Disconnect connector to fault reader V.A.G 1551.

3.10 - Ending output

- Press keys -0- and -6- to end the output.

-> Indicated on display:

```
Rapid data transfer      Q
06 End output
```

- Confirm entry with the Q key.

-> Indicated on display:

Protected by Copyright. Copying for private or commercial purposes, in part or in whole, is not permitted unless authorised by Volkswagen AG. Volkswagen AG does not guarantee or accept any liability with respect to the correctness of information in this document. Copyright by Volkswagen AG.
satelettronica

```
Rapid data transfer      HELP
Enter address word XX
```

- Switch off ignition.
- Disconnect connector to fault reader V.A.G 1551.

3.11 - Fault table

Notes:

- The fault table is listed according to the 5 digit fault code on the left.
- Explanation of the fault types (e.g. "open circuit/short circuit to earth"):

=> Fault reader operating instructions

- Before renewing components indicated as being faulty, check the wiring and connectors to these components as well as the earth connections using current flow diagram. This is particularly relevant if faults are output as "occurring sporadically" (SP).
- The faults displayed can be localised using the test table.

V.A.G 1551 print-out	Possible fault cause	Fault elimination
00000 No fault recognised	If "No fault recognised" appears after carrying out repairs self-diagnosis is ended	
00849 S contact on ignition/starter switch -D Undefined switch condition	- Terminal 15 OK. but S contact defective - Defective wiring or connectors	- Read measured value block; Display group number 010 => Page 51 , Display zone 1
00946 Interior light -W Short to positive	- Defective wiring or connectors - Interior light or one of the reading lights are defective	- Check wiring and connectors using current flow diagram - Renew interior light or defective reading light

V.A.G 1551 print-out	Possible fault cause	Fault elimination
00955 Key 1 Adaption limit exceeded	- Key not adapted - Key operated more than 200 times - beyond range of system	- Read measured value block; display group number 013 => Page 52 , display zone 1...4
00956 Key 2 Adaption limit exceeded		
00957 Key 3 Adaption limit exceeded		
00958 Key 4		

Copyright by Volkswagen AG. Volkswagen AG does not guarantee or accept any liability with respect to the correctness of information in this document. Copyright by Volkswagen AG. Protected by copyright. Copying for private or commercial purposes, in part or in whole, is not permitted unless authorised by Volkswagen AG.
satelettronica

V.A.G 1551 print-out	Possible fault cause	Fault elimination
Adaption limit exceeded		

V.A.G 1551 print-out	Possible fault cause	Fault elimination
01044 Control unit incorrectly coded	- Control unit installed does not correspond to the vehicle equipment - Control unit supplied is not programmed or not fully programmed	- Renew control unit Inform part supplier of the problem
01131 Turn signal activation Undefined switch position	- Defective wiring or connectors - Fuse S144 defective	- Check wiring and connectors using current flow diagram Perform final control diagnosis => Page 48 - Check fuses using current flow diagram or renew

V.A.G 1551 print-out	Possible fault cause	Fault elimination
01134 Alarm horn -H12 Undefined switch position	- Defective wiring or connectors - Fuse S111 defective - Alarm horn -H12 defective	- Check wiring and connectors using current flow diagram Perform final control diagnosis => Page 48 - Check fuses using current flow diagram or renew - Renew alarm horn -H12
01135 Interior monitoring sensors Open circuit Defective	- Defective wiring or connectors - Sensors for monitoring interior not installed - Sensors for monitoring interior defective	- Check wiring and connectors using current flow diagram Read measured value block; Display group number 009 = Page 50 , display zone 4 - Check installation - Renew sensors for monitoring interior

V.A.G 1551 print-out	Possible fault cause	Fault elimination
01179 Incorrect key programming	- Matching of keys (function 10) not performed correctly	- See description for matching keys with remote control, page 52 , display zones 1...41)

1) Number of keys matched ("learnt") will be displayed.

V.A.G 1551 print-out	Possible fault cause	Fault elimination
01330 Central control unit for convenience system -J393		

Protected by copyright. Copying for private or commercial purposes, in part or in whole, is not permitted unless authorised by Volkswagen AG. Volkswagen AG does not guarantee or accept any liability with respect to the correctness of information in this document. Copyright by Volkswagen AG.
satelettronica

V.A.G 1551 print-out	Possible fault cause	Fault elimination
Defective	- Central control unit for convenience system defective	- Renew convenience system central control unit
Voltage supply too high	- Battery A defective or discharged - Voltage regulator C1 defective - Alternator C defective	- Check wiring and connectors using current flow diagram Read measured value block; Display group number 014 => Page 53 , display zone 1
Voltage supply too low	- Battery A defective or discharged	

V.A.G 1551 print-out	Possible fault cause	Fault elimination
01484 Central locking key button, lock Short to earth1)	- Defective wiring or connectors	- Check wiring and connectors using current flow diagram
01485 Central locking key button, unlock Short to earth1)	- Defective wiring or connectors	- Check wiring and connectors using current flow diagram

1) Fault recorded if operated for longer than 10 seconds

3.12 - Final control diagnosis

The components displayed in the final control diagnosis can differ depending upon the equipment fitted to the vehicle. For example on vehicles without ATA there will be no step "1" as listed in the table below.

The final control diagnosis activates the following components in the stated sequence:

Step	Display in tester	Reaction
	Alarm horn (for anti-theft alarm)	- Horn sounds continuously
	Turn signal lights activation (for anti-theft alarm)	- Activated continuously (lights up cont.)
	Interior light, reading lights	- Interior and reading lights are activated
	"Safe" LED driver's door	- "Safe" LED lights up
	END	- Information: End of regular final control test

Special tools, testers and auxiliary items

- Fault reader V.A.G 1551 or vehicle system tester V.A.G 1552 with cable V.A.G 1551/3
- Adapter set V.A.G 1594
- Diode test lamp V.A.G 1527
- Current flow diagram

Work sequence

- Connecting fault reader => Page 39 .

-> Indicated on display:

```
Rapid data transfer      HELP
Select function XX
```

satelettronica
Protected by copyright. Copying for private or commercial purposes, in part or in whole, is not permitted unless authorised by Volkswagen AG. Volkswagen AG does not guarantee or accept any liability with respect to the correctness of information in this document. Copyright by Volkswagen AG.

- Operate fault reader taking into account the information on the display:
- Input 03 for "Final control diagnosis" function.
- Switch off ignition and remove ignition key from ignition lock.

-> Indicated on display:

```
Rapid data transfer      Q
03 Final control diagnosis
```

- Confirm entry with the Q key.

-> Indicated on display:

```
Final control diagnosis
```

Perform press button individual tests: See table on page 48 .

Final control diagnosis can be terminated by pressing the "C" key.

- Press ⇒key.

If a component does not function:

- Continue final control diagnosis to the end.

3.13 - Reading measured value block

Special tools, testers and auxiliary items

◆ Fault reader V.A.G 1551 with cable V.A.G 1551/3

- Connecting fault reader => Page 39 .

The measured values in the functions read measured value block and basic setting are described during the individual component test. This table serves only as an overview.

The measured value block is divided into 17 display group numbers. But only the measured value blocks described in the Workshop Manual are of importance. The assignment of the individual display zones can be taken from the display group overview from Page 50 .

-> Indicated on display:

```
Rapid data transfer      HELP
Select function XX
```

- Press keys -0- and -8- (08 initiates the "Read measured value block" function).

-> Indicated on display:

```
Rapid data transfer      Q
08 Read measured value block
```

- Confirm entry with the Q key.

-> Indicated on display:

```
Read measured value block      HELP
Input display group number XX
```

The display group number 001 is an example, to illustrate the sequence.

- Press keys 0, 0 and 1 for "Display group number 1" and confirm entry with Q key.

-> Indicated on display:

Protected by copyright. Copying for private or commercial purposes, in part or in whole, is not permitted unless authorised by Volkswagen AG. Volkswagen AG does not guarantee or accept any liability with respect to the correctness of information in this document. Copyright by Volkswagen AG.
satelettronica

(1...4 = Display zones)

```
Read measured value block     1
"
     1     2     3     4
```

Note:

To change to another display group proceed as follows:

Display group	V.A.G 1551	V.A.G 1552
Higher	Press key 3	Press ↑ key
Lower	Press key 1	Press ↓ key
Skip	Press key C	Press key C

- Displayed after pressing C key.

-> Indicated on display:

```
Read measured value block     HELP
Input display group number XXX
```

- Now enter the display group number required.

3.14 - Display group overview

Break down of display content for display group number 009

Display group 009 -Central control unit-						
Read measured value block 9			⇒	◂ Indicated on display		
xxx	xxx	xxx	xxx			
1	2	3	4	◂ Display zones	Specification	Evaluation
				Interior monitor sensor	yes no not installed	=> Page 51
				Remote control unit key button	open, closed, (with 0 or 1)	
		Empty1)				
	Empty1)					

1) Empty means in this case: Display zone is blank

Protected by copyright. Copying for private or commercial purposes, in part or in whole, is not permitted unless authorised by Volkswagen AG. Volkswagen AG does not guarantee or accept any liability with respect to the correctness of information in this document. Copyright by Volkswagen AG.
satelettronica

Evaluating display group number 009

Display zone	Description	Display	Rectifying fault
3	Remote control key button	unlock, lock, (with 0 or 1)	- Visual check of wiring Check connectors of corresponding current circuit are located correctly and securely and simultaneously observe the display If the display content does not change during operation, the fault must be rectified or the relevant part renewed Erase fault memory Perform function test Interrogate fault memory again If necessary, re-adapt remote control (function 10, adaption =>Page 56)
4	Interior monitor sensor	yes no not installed	

Break down of display content for display group number 010

Display group 010 -Central control unit-						
Read measured value block 10			⇒	◂ Indicated on display		
xxx	xxx	xxx	xxx			
1	2	3	4	◂ Display zones	Specification	Evaluation
				Ignition	Terminal 15 on, Terminal 15 off	=> Page 51
			Tailgate key switch		open, closed, not oper. implausible	
		Empty1)				
	S-contact				operated not operated	

1) Empty means in this case: Display zone is blank

Evaluating display group number 010

Display zone	Description	Display	Rectifying fault
	S-contact	operated not operated	- Visual check of wiring Check that connections of relevant current circuit are correctly connected and seated securely whilst simultaneously observing display If the display does not change when operating, rectify fault or renew relevant component Erase fault memory Perform functional check Interrogate fault memory again
	Empty1)		
	Tailgate key switch	open closed not oper. implausible	

Protected by copyright. Copying for private or commercial purposes, in part or in whole, is not permitted unless authorised by Volkswagen AG. Volkswagen AG does not guarantee or accept any liability with respect to the correctness of information in this document. Copyright by Volkswagen AG.
satelettronica

Display zone	Description	Display	Rectifying fault
	Ignition	Terminal 15 on Terminal 15 off	

1) Empty means in this case: Display zone is blank

Break down of display content for display group number 011

Display group 011 -Central control unit-						
Read measured value block 11 ⇒				◂ Indicated on display		
xxx	xxx	xxx	xxx			
1	2	3	4	◂ Display zones	Specification	Evaluation
				Empty1)		=>Page 52
			Empty1)			
		Tailgate contact switch3)			open, closed	
	Bonnet contact switch				open, closed	

1) Empty means in this case: Display zone is blank

3) Lock rotary latch must be engaged in second stage.

Evaluating display group number 011

Display zone	Description	Display	Rectifying fault
	Bonnet contact switch	open, closed	- Visual check of wiring Check that connections of relevant current circuit are correctly connected and seated securely whilst simultaneously observing display If the display does not change when operating, rectify fault or renew relevant component Erase fault memory Perform functional check Interrogate fault memory again
	Boot lid/tailgate contact switch3)	open closed	

3) Lock rotary latch must be engaged in second stage.

Break down of display content for display group number 013

Display group 013 -Central control unit-						
Read measured value block 13 ⇒				◂ Indicated on display		
xxx	xxx	xxx	xxx			
1	2	3	4	◂ Display zones	Specification	Evaluation
				Key number	mv = display 0...4 0: not operated	=> Page 53
			Empty1)			
		Empty1)				

satelettronica

Empty1)		

1) Empty means in this case: Display zone is blank

Evaluating display group number 013

Display zone	Description	Display	Rectifying fault
4	Key number	Display = 1...41)	When operating a "synchronised" radio wave key, the position of the "synchronised" key is shown. If the tester displays "0" even when the remote button is pressed, this key must be "re-synchronised" using adaption (10).

1) A max. of 4 remote controls can be "learnt".

Break down of display content for display group number 014

Display group 014 -Central control unit-						
Read measured value block 14			⇒	◂ Indicated on display		
xxx	xxx	xxx	xxx			
1	2	3	4	◂ Display zones	Specification	Evaluation
				Empty1)		=>Page 53
				Interior monitoring switch-off1)	on, off, not installed	
				RLR button and RL handle	not oper. RLR, RL hndl op, implausibl	
				Vehicle system voltage terminal 30	Volts	

1) Interior monitoring switch-off

Evaluating display group number 014

Display zone	Description	Display	Rectifying fault
	Vehicle system voltage terminal 30	in Volts	- Visual check of wiring Check that connections of relevant current circuit are correctly connected and seated securely whilst simultaneously observing display If the display does not change when operating, rectify fault or renew relevant component Erase fault memory Perform functional check Interrogate fault memory again
	RLR button and RL handle	not operated RLR, RL handle, implausible	

Protected by copyright. Copying for private or commercial purposes, in part or in whole, is not permitted unless authorised by Volkswagen AG. Volkswagen AG does not guarantee or accept any liability with respect to the correctness of information in this document. Copyright by Volkswagen AG.
satelettronica

Display zone	Description	Display	Rectifying fault
	Interior monitoring switch-off1)	on, off, not installed	

1) Interior monitoring switch-off

Break down of display content for display group number 015

Display group 015 -Central control unit-						
Read measured value block 15 ⇒				◂ Indicated on display		
xxx	xxx	xxx	xxx			
1	2	3	4	◂ Display zones	Specification	Evaluation
				4. Alarm source (4th last)	Display, see table on page 54	=> Page 54
				3. Alarm source (3rd last)		
				2. Alarm source (penultimate)		
				1. Alarm source (last)		

Break down of display content for display group number 015

Display zone	Description	Display	Rectifying fault
	Alarm source (last)	Display see table below	Only the last 4 ATA1) activations are shown!
	Alarm source (penultimate)		For example "64" = Bonnet contact switch (see table below for possible sources of alarm)
	Alarm source (3rd last)		
	Alarm source (4th last)		

1) Anti-theft alarm

Possible sources of alarm	Display
Boot lid/tailgate contact switch	1
Front passenger, rear left, rear right rotary latch switch	14
Ignition	16
Immobilizer	17
Interior monitoring	32
Bonnet contact switch	64
Driver's rotary latch switch	128
No alarm	255

Break down of display content for display group number 016

Display group 016						
Read measured value block 16			⇒	◂ Indicated on display		
xxx	xxx	xxx	xxx			
1	2	3	4	◂ Display zones	Specification	Evaluation
				Empty1)		
				Empty1)		

satelettronica
Protected by copyright. Copying for private or commercial purposes, in part or in whole, is not permitted unless authorised by Volkswagen AG. Volkswagen AG does not guarantee or accept any liability with respect to the correctness of information in this document. Copyright by Volkswagen AG.

	Empty1)		
	Immobilizer key recognition	yes, no, not fitted	=> Page 55

1) Empty means in this case: Display zone is blank

Evaluating display group number 016

Display zone	Description	Display	Rectifying fault
	Immobilizer key recognition	yes, no, not fitted	- Visual check of wiring Watch display and check connectors of appropriate current circuit for correct engagement and tight fit If the display does not change when checking connectors, rectify fault or renew relevant component Erase fault memory Perform functional check Interrogate fault memory again

Break down of display content for display group number 017

Display group 017 Read measured value block 17 ⇒				◂ Indicated on display		
xxx	xxx	xxx	xxx			
1	2	3	4	◂ Display zones	Specification	Evaluation
				Empty1)		=> Page 55
			Remaining door contacts		open, closed	
		Door contact, driver's side			open, closed	
	Central locking signal				open, closed, not operated, implausible	

1) Empty means in this case: Display zone is blank

Evaluating display group number 017

Display zone	Description	Display	Rectifying fault
	Central locking signal	open, closed, not operated, implausible	- Visual check of wiring Check connectors of corresponding current circuit are located correctly and securely and simultaneously observe the display If the display content does not change during operation, the fault must be rectified or the relevant part renewed Erase fault memory Perform function test Interrogate fault memory again
	Door contact, driver's side	open, closed	
	Remaining door contacts	open, closed	

Protected by copyright. Copying for private or commercial purposes, in part or in whole, is not permitted unless authorised by Volkswagen AG. Volkswagen AG does not guarantee or accept any liability with respect to the correctness of information in this document. Copyright by Volkswagen AG.
sateletronica

3.15 - Matching ignition keys to radio remote control

Notes:

- If new or additional ignition keys are required they must be matched to the immobilizer and convenience system control electronics.
- The matching procedure must always be carried out for all the ignition keys, including the existing ones.
- The number of keys already adapted will be displayed when the adaption function is selected.
- With the introduction of this generation of convenience system it is possible to programme additional functions. The functions and the programming are described from Page 59 .
- The matching can be interrupted with the "C" key of the V.A.G 1551.

Warning!
The V.A.G 1551 dealership number (workshop code) will be stored in immobilizer control unit when adapting ignition keys.

Prerequisites

- All ignition keys available. If no old ignition key is available see "Lost key procedure",

=> Electrical system self-diagnosis; Repair group 01; Self-diagnosis for Immobilizer. Self-diagnosis for Immobilizer.

- Key fob with covered secret number is available, if not see "Establishing secret number",

=> Electrical system self-diagnosis; Repair group 01; Self-diagnosis for Immobilizer. Self-diagnosis for Immobilizer.

- Insert correct profile ignition key in the ignition lock.
- Connecting fault reader => Page 39 .

The adaption shown here is only an example.

-> Indicated on display:

```
Rapid data transfer      HELP
Select function XX
```

- Press keys 1 and 0 (10 selects function "Adaption").

-> Indicated on display:

```
Rapid data transfer      Q
10 - Adaption
```

- Confirm entry with the Q key.

-> Indicated on display:

```
Adaption
Enter channel number XX
```

- Press keys 0 and 0 (all keys are erased with channel number 00).
- Confirm entry with the Q key.

Note:

It is not possible to match a new or additional key(s) without erasing existing learnt/matched key(s).

-> Indicated on display:

```
Adaption      Q
Erase learnt values
```

Protected by copyright. Copyright by Volkswagen AG. Copyright by Volkswagen AG. Volkswagen AG does not guarantee or accept any liability with respect to the correctness of information in this document. Copying for private or commercial purposes, in part or in whole, is not permitted unless authorised by Volkswagen AG.
satelettronica

- Confirm entry with the Q key.

-> Indicated on display:

```
Adaption
Learnt values are erased
```

- Press ⇒key.

-> Indicated on display:

```
Rapid data transfer      HELP
Select function XX
```

- Press keys 1 and 0 (10 selects function "Adaption").

-> Indicated on display:

```
Rapid data transfer      Q
10 - Adaption
```

- Confirm entry with the Q key.

-> Indicated on display:

```
Adaption
Enter channel number XX
```

- Press keys 0 and 1 (all keys are "learnt" with channel number 01).

-> Indicated on display:

```
Adaption     Q
Enter channel number 01
```

- Confirm entry with the Q key.

-> Indicated on display:

```
Channel 1.........Adaption     1
Key          1
```

The top line displays number of keys to be "learnt" (standard =1). Select number of keys with keys 1 and 3.

- Press ⇒key.

-> Indicated on display:

```
Channel 1.........Adaption     1
Enter matching value XXXXX
```

- Press the 0 key four times and then enter the number of all ignition keys to be matched, including the existing key, (e.g. 00003); max. possible Qty. 4.
- Press ⇒key.

-> Indicated on display:
Number of radio wave key to be "learnt".

```
Channel 1     Adaption     3     Q
Key     3
```

- Confirm entry with the Q key.

-> Indicated on display:

```
Channel 1     Adaption     3     Q
Store amended value?
```

- Confirm entry with the Q key.

-> Indicated on display:

satelettronica

```
Channel 1     Adaption     1
Amended value is stored
```

- Press ⇒key.

-> Indicated on display:

```
Rapid data transfer     HELP
Select function XX
```

- A button must be pressed once, for at least 1 second, on each of the radio wave keys to be "learnt" (in example above, 3 keys).

Adaption is confirmed by a beep sound.

- Switch off ignition and remove ignition key.
- Perform functional check (e.g. 3) of radio wave keys.

Note:

All 3 keys (see example) can be "learnt" in one matching sequence.

15 seconds must not be exceeded when matching all ignition keys (pressing a button).

A successful adaption can be determined via Read measured value block, function 08, display group number 013, Page 52 . When operation the radio wave unit both of first measurement values must have the status OK. Simultaneously the last measurement value will show the positional number of the key (i.e. first, second, third, fourth key).

If the remote control key is operated several times the third display -no measured value- changes to "OK".

The adaption of ignition keys is automatically terminated when:

- number of keys to be adapted is reached.
- a button of one of the keys to be "learnt" is pressed frequently.
- Permissible matching period of 15 seconds is exceeded (fault is stored).

- Select function 02 "Interrogate fault memory". If there is no fault stored, the matching of the keys has been successfully completed.
- Press keys -0- and -6- to end the output.

-> Indicated on display:

```
Rapid data transfer     Q
06 End output
```

- Confirm entry with the Q key.

-> Indicated on display:

```
Rapid data transfer     HELP
Enter address word XX
```

- Switch off ignition.
- Disconnect connector to fault reader V.A.G 1551.

3.16 - Matching a new additional key

- Insert a correct profile ignition key (old) in the ignition switch/lock.
- Switch on ignition.
- Lock the vehicle mechanically (driver's door) with a new key (to be learned) and then operate one of the radio wave buttons on the key.
- Then after a pause of more than one second operate the radio wave button on the key a second time.

Protected by copyright. Copying for commercial purposes, in part or in whole, is not permitted unless authorised by Volkswagen AG. Volkswagen AG does not guarantee or accept any liability with respect to the correctness of information in this document. Copyright by Volkswagen AG.
satelettronica

- The adaption process is completed and will be confirmed by the vehicle horn sounding.

3.17 - Radio remote control functional variations

Channel number	Significance	Measured value
03	Auto lock/unlock: Vehicles will be locked when a speed of 15 km/h is reached	on=1 off= 0
04	Auto lock/unlock: Vehicles will be unlocked when the ignition key is withdrawn from the ignition lock	on=1 off= 0
05	IM switch-off: Interior monitoring is activated or deactivated by operating central locking closed twice	on=1 off= 0
06	Horn sounds when unlocking: Confirmation signal when unlocking1)	on=1 off= 0
07	Horn sounds when locking: Confirmation signal when locking1)	on=1 off= 0
08	Turn signals flash when unlocking: Unlocking is confirmed by turn signals flashing twice	on=1 off= 0
09	Horn sounds when locking: Locking is confirmed by turn signals flashing once	on=1 off= 0
10	Setting for alarm horn: Programming the horn operation when the alarm is triggered appropriate to the legislation of the countries	1= Rest of Europe 2= Germany 3= Great Britain

1) No longer allowed according to German legislation.

The matching shown here is only an example.

-> Indicated on display:

```
Rapid data transfer        HELP
Select function XX
```

- Press keys 1 and 0 (10 selects function "Adaption").

-> Indicated on display:

```
Rapid data transfer        Q
10 - Adaption
```

- Confirm entry with the Q key.

-> Indicated on display:

```
Adaption
Enter channel number XX
```

- Press keys 0 and 8 (channel number 08 switches the turn signals on or off when unlocking).

-> Indicated on display:

```
Adaption      Q
Enter channel number 08
```

- Confirm entry with the Q key.

-> Indicated on display:

```
Channel 8      Adaption      1
Unlock      Flashing      on
```

- Press ⇒key.

Protected by copyright. Copying for private or commercial purposes, in part or in whole is not permitted unless authorised by Volkswagen AG. Volkswagen AG does not guarantee or accept any liability with respect to the correctness of information in this document. Copyright by Volkswagen AG.
satelettronica

-> Indicated on display:

```
Channel 8.........Adaption     1
Enter adaption value XXXXX
```

- Press key 0 five times (e.g. 00000).

-> Indicated on display:

```
Channel 8.........Adaption     0     Q
Enter adaption value 00000
```

- Confirm entry with the Q key.

-> Indicated on display:

```
Channel 8     Adaption     0     Q
Unlock     Flashing     off
```

- Confirm entry with the Q key.

-> Indicated on display:

```
Channel 8     Adaption     0     Q
Store amended value?
```

- Confirm entry with the Q key.

-> Indicated on display:

```
Channel 8     Adaption     0
Amended value is stored
```

- Press ⇒key.

-> Indicated on display:

```
Rapid data transfer     HELP
Select function XX
```

- Press keys -0- and -6- to end the output.

-> Indicated on display:

```
Rapid data transfer     Q
06 End output
```

- Confirm entry with the Q key.

-> Indicated on display:

```
Rapid data transfer     HELP
Enter address word XX
```

- Switch off ignition.
- Disconnect connector to fault reader V.A.G 1551.

Protected by copyright. Copying for private or commercial purposes, in part or in whole, is not permitted unless authorised by Volkswagen AG. Volkswagen AG does not guarantee or accept any liability with respect to the correctness of information in this document. Copyright by Volkswagen AG.
satelettronica

3.18 - Removing and installing batteries for the main key with radio wave remote control

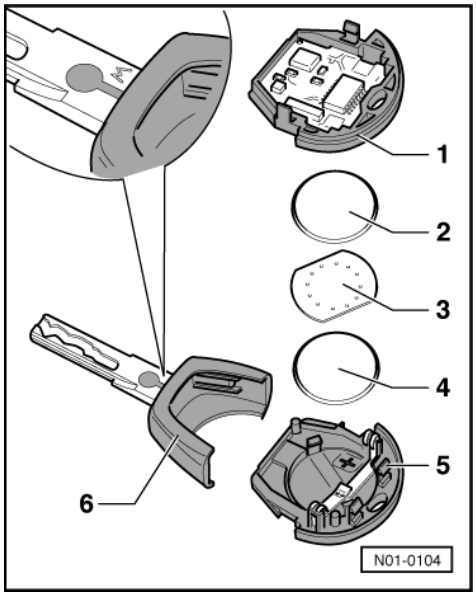

-> - Transmitter unit - upper part (turned-over)
- Button batteries
- Contact plate
- Button battery
- Transmitter unit - lower part
- Main key with variable code transponder

Removing

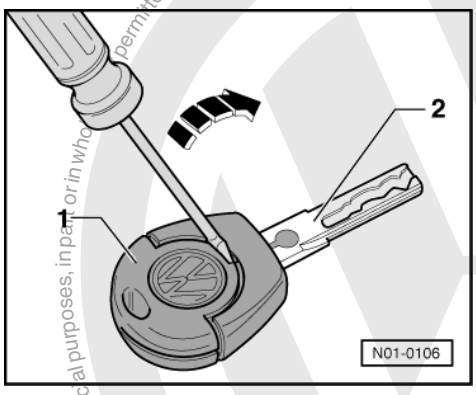

- -> Insert a screwdriver in the slot between the transmitter unit -1- and the main key -2-.
- Move the screwdriver in direction of arrow and unclip the transmitter unit from the main key.

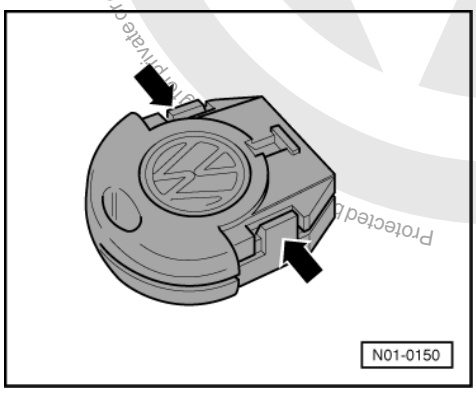

Protected by copyright. Copyright by Volkswagen AG. Volkswagen AG does not guarantee or accept any liability with respect to the correctness of information in this document. Copyright by Volkswagen AG.
satelettronica

- -> Lever the transmitter unit apart on the two locating lugs -arrows-.

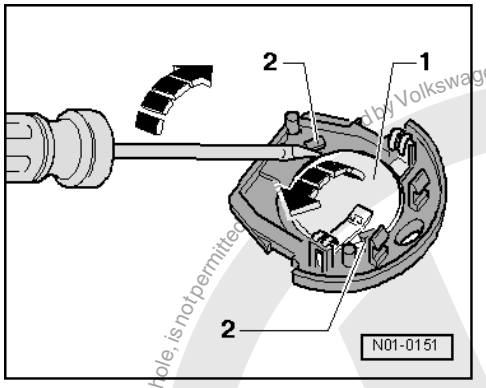

- -> Unclip upper battery -1- from the retainers -2- with a screwdriver in direction of arrow.

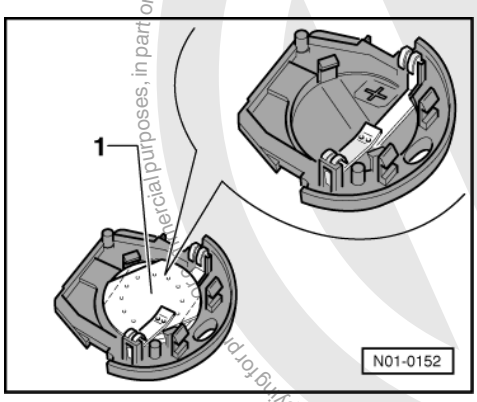

- -> The contact plate -1- has two straight edges. When these edges are turned towards the retainers the contact plate can be removed.
- The contact plate can also be unclipped with a screwdriver.
- Now unclip the lower battery from the retainers with a screwdriver.

Installing

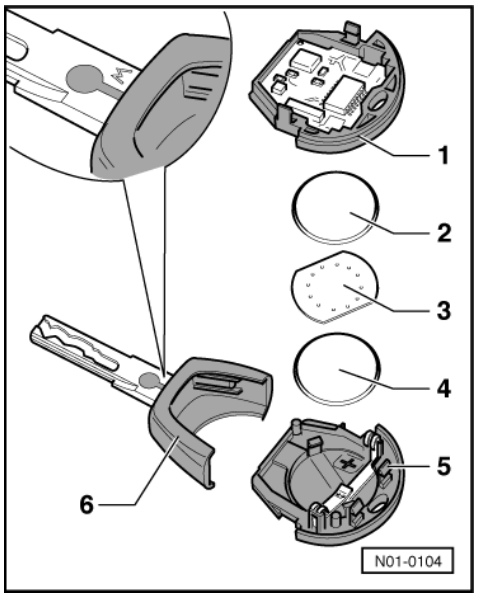

Note the polarity and correct position when installing the batteries.

- -> Place the battery -4- with the positive terminal downwards into the transmitter unit body (positive terminal is marked on housing).
- Now place the contact plate -3- on the battery -4-.

Copyright by Volkswagen AG. Volkswagen AG does not guarantee or accept any liability with respect to the correctness of information in this document. Copyright by Volkswagen AG.
Protected by copyright. Copying for private or commercial purposes, in part or in whole, is not permitted.
satelettronica

- Place battery -2- with the positive terminal downwards onto the contact plate and secure.
- Place sender unit -1- and sender unit -5- together and clip together.
- Then engage the transmitter unit with the main key.

4 - Self-diagnosis for the interior monitoring system

4.1 - Self-diagnosis for the interior monitoring system

4.2 - Description of the interior monitoring system

The interior monitoring system is an independent system. It consists of one sender and one receiver.

The interior sensors work on the ultrasonic wave principle. The alarm of the anti-theft alarm system will be triggered if movement is detected in the interior when the system is active.

The interior sensors can be switched off via a switch in the B pillar/door sill. To do this the ignition must be switched off and ignition key must be withdrawn from the ignition switch, then operate switch and lock the vehicle.

The sensors will be switched on again the next time the vehicle is unlocked.

A waiting time of at least 30 seconds must be observed before commencing tests when the vehicle is locked.

The control unit for the interior monitoring system (J393) is integrated in the sensor unit and installed in the roof trim above the B pillar. The control unit is equipped with a fault memory. The self-diagnosis connection is located in the centre console.

The control unit recognizes faults and malfunctions in the interior monitoring system and stores them in a non-volatile memory.

Testers V.A.G 1551 and 1552 can be used to interrogate the fault memories and code the control units as well as the function self-diagnosis of the VAS 5051.

The fault information displayed is used to refer to a fault table with notes on the possible causes for directed repair measures.

Faults which can be attributed to a temporary open circuit in the wiring or a loose contact, will also be stored. These faults will be displayed as sporadic faults "SP".

4.3 - Anti-theft alarm system active indicator

The optical active indicator of the remote control with anti-theft alarm system (ATA) is via an additional LED in the upper part of the driver's door trim. The LED flashes, when the ATA system is activated via the convenience control unit.

4.4 - Initiating self-diagnosis for the interior monitoring system

Test prerequisites:

- Voltage supply and fuses SB14, 22, 26 and 41 for the respective system OK.
- To initiate the self-diagnosis the ignition must be switched on "Terminal 15 on".

Protected by copyright. Copying for private or commercial purposes, in part or in whole, is not permitted unless authorised by Volkswagen AG. Volkswagen AG does not guarantee or accept any liability with respect to the correctness of information in this document. Copyright by Volkswagen AG.
satelettronica

Notes:

- If the display remains blank, check V.A.G 1551 voltage supply according to current flow diagram.

=> Current flow diagrams, Electrical fault finding and Fitting locations binder

- Additional operating information can be printed out depending on the programme by pressing the HELP key of V.A.G 1551.
- The ⇒key is used for advancing the programme sequence.
- The PRINT key is used for switching on the printer (warning lamp in key lights up).

- Connect fault reader => Page 2 .
- Switch on ignition.
- Switch on printer with Print button (warning lamp in button lights up).
- Press key -1- for "Rapid data transfer" mode.

-> Indicated on display:

```
Rapid data transfer      HELP
Enter address word XX
```

Address word for the interior monitoring system: 45

-> Indicated on display:

```
Rapid data transfer      HELP
Enter address word XX
```

- Press keys -4- and -5-.

-> Indicated on display after entering the address word 45:

```
Rapid data transfer      Q
46 Interior monitoring system
```

- Confirm entry with the Q key.

and then the following appears in the display:

-> Indicated on display:

```
Rapid data transfer
Tester sends address word 45
```

-> The control unit identification appears in the display of fault reader V.A.G 1551, e.g.:

```
6N0 951 171 Interior monitor     0002
```

At this point the programme can be advanced with the C key to the option "Rapid data transfer, select function".

- Press ⇒key.

-> Indicated on display:

```
Rapid data transfer      HELP
Select function XX
```

4.5 - Overview of the selectable functions

	Page
02 - Interrogating fault memory	70
03 - Final control diagnosis	
05 - Erasing fault memory	
06 - Ending output	
08 - Read measured value block	

satelettronica

Notes:

- A list of possible functions is printed out after pressing the HELP key.
- Do not select further functions, which can be printed out after pressing the HELP key.
- After the function is completed the V.A.G 1551 returns to the following start position:

-> Indicated on display:

```
Rapid data transfer      HELP
Select function XX
```

4.6 - Interrogating fault memory

Note:

The vehicle system tester V.A.G 1552 can be used instead of the fault reader V.A.G 1551, however a print-out is not possible.

- Connecting fault reader => Page 63 .
- Switch on printer with Print button (warning lamp in button lights up).

-> Indicated on display:

```
Rapid data transfer      HELP
Select function XX
```

- Press keys -0- and -2- (the function "Interrogate fault memory" is entered with 02).

-> Indicated on display:

```
Rapid data transfer      Q
02 - Interrogate fault memory
```

- Press Print key
- Confirm entry with the Q key.

-> The number of stored faults appears in the display.

```
X faults recognized!
```

The stored faults are displayed and printed out one after the other.

Note:

If a fault is recognised:

- . Rectify fault
- 2. Erase fault memory (function 05).
- 3. Interrogate fault memory again (function 02).

- The faults printed out can be rectified with aid of fault table => from page 67 .
- The function "Read measured value block" => Page 71 are additional aids.

The measured value block is divided into 3 display group numbers. The assignment of the individual display zones can be taken from the display group overview from page 71 .

If "No fault recognised" is displayed the programme will return to the initial position after pressing the ⇒ key.

```
No fault recognised!
```

-> Indicated on display:

```
Rapid data transfer      HELP
Select function XX
```

Protected by copyright. Copying for private or commercial purposes, in part or in whole, is not permitted unless authorised by Volkswagen AG. Volkswagen AG does not guarantee or accept any liability with respect to the correctness of information in this document. Copyright by Volkswagen AG.
satelettronica

If something else is displayed:

=> Fault reader operating instructions

- Press keys -0- and -6- to end the output.

-> Indicated on display:

```
Rapid data transfer      Q
06 End output
```

- Confirm entry with the Q key.

-> Indicated on display:

```
Rapid data transfer      HELP
Enter address word XX
```

- Switch off ignition.
- Disconnect connector to fault reader V.A.G 1551.

4.7 - Erasing fault memory

Note:

The vehicle system tester V.A.G 1552 can be used instead of the fault reader V.A.G 1551, however a print-out is not possible.

The fault "Control unit defective" cannot be erased.

- Connecting fault reader => Page 63 .

Prerequisites:

- Faults are rectified
- Functional check has been carried out
- Fault memory interrogated again

-> Indicated on display:

```
Rapid data transfer      HELP
Select function XX
```

- Press keys -0- and -5- (the function "Erase fault memory" is entered with 05).

-> Indicated on display:

```
Rapid data transfer      Q
05 Erase fault memory
```

- Confirm entry with the Q key.

-> Indicated on display:

```
Rapid data transfer
Fault memory is erased!
```

- Press ⇒key.

-> Indicated on display:

```
Rapid data transfer      HELP
Select function XX
```

Volkswagen AG. Volkswagen AG does not guarantee or accept any liability with respect to the correctness of information in this document. Copyright by Volkswagen AG.
Protected by copyright. Copying for private or commercial purposes, partly or in whole, is not permitted unless authorised by Volkswagen AG.
satelettronica

Notes:

```
Warning!
Fault memory was not interrogated
```

-> If this appears in the display, the test sequence is faulty.
- Adhere strictly to test sequence; first of all interrogate fault memory, then erase memory.

- Press keys -0- and -6- to end the output.

-> Indicated on display:

```
Rapid data transfer      Q
06 End output
```

- Confirm entry with the Q key.

-> Indicated on display:

```
Rapid data transfer      HELP
Enter address word XX
```

- Switch off ignition.
- Disconnect connector to fault reader V.A.G 1551.

4.8 - Ending output

- Press keys -0- and -6- to end the output.

-> Indicated on display:

```
Rapid data transfer      Q
06 End output
```

- Confirm entry with the Q key.

-> Indicated on display:

```
Rapid data transfer      HELP
Enter address word XX
```

- Switch off ignition.
- Disconnect connector to fault reader V.A.G 1551.

4.9 - Fault table

Notes:

- The fault table is listed according to the 5 digit fault code on the left.
- Explanation of the fault types (e.g. "open circuit/short circuit to earth"):

=> Fault reader operating instructions

- Before renewing components indicated as being faulty, check the wiring and connectors to these components as well as the earth connections using current flow diagram. This is particularly relevant if faults are output as "occurring sporadically" (SP).
- The faults displayed can be localised using the test table.

-> Fault reader print-out:
The number shown here in bold 035 (e.g.) has no relevance.

```
01463     035
Alarm via sensor for ATA system
```

Photocopy copyright © copying for private or commercial purposes, in part or in whole, is not permitted unless authorised by Volkswagen AG. Volkswagen AG does not guarantee or accept any liability with respect to the correctness of information in this document. © Copyright by Volkswagen AG.
satelettronica

V.A.G 1551 print-out	Possible fault cause	Fault elimination
00000 No fault recognised	If "No fault recognised" appears after carrying out repairs self-diagnosis is ended	
65535 Control unit defective	- Control unit defective	- Replace control unit
01462 Anti-theft alarm ultra-sonic sensor -G209 Implausible signal	- Wiring or connections defective - The ultra-sonic signal sequence is, at present, untypical for an ultra-sonic measurement (e.g. constant, or the signal is overall too high or too low) - Anti-theft alarm ultra-sonic sensor -G209 defective	- Check wiring and connectors using current flow diagram Renew anti-theft alarm ultra-sonic sensor -G209

V.A.G 1551 print-out	Possible fault cause	Fault elimination
01463 Alarm via sensor for ATA	This fault entry is an indication for the workshop, then an alarm has been triggered. Using measured value block 15 and the convenience system table it is possible to locate the area which triggered the system. In addition the warning lamp in the deactivation button will flash for 1 minute.	- Read measured value block; Display group number 015 => Page 54 , display zone 1

4.10 - Final control diagnosis

Special tools, testers and auxiliary items

- Fault reader V.A.G 1551 or vehicle system tester V.A.G 1552 with cable V.A.G 1551/3

Note:

The vehicle system tester V.A.G 1552 can be used instead of the fault reader V.A.G 1551, however a print-out is not possible.

- Adapter set V.A.G 1594
- Diode test lamp V.A.G 1527
- Current flow diagram

Work sequence

- Connecting fault reader => Page 63 .
- Switch off ignition and remove ignition key from ignition lock.
- Then the vehicle must be locked and the anti-theft alarm system is activated.

-> Indicated on display:

```
Rapid data transfer      HELP
Select function XX
```

- Press keys -0- and -3- (the function "Final control diagnosis" is entered with 03).

Protected by copyright. Copying for private or commercial purposes, in part or in whole, is not permitted unless authorised by Volkswagen AG. Volkswagen AG does not guarantee or accept any liability with respect to the correctness of information in this document. Copyright by Volkswagen AG.

satelettronica

Final control diagnosis can be terminated by pressing the "C" key.

- Operate fault reader taking into account the information on the display:

-> Indicated on display:

```
Rapid data transfer
03 - Final control diagnosis
```

- Press ⇒key.

-> Indicated on display:

```
Final control diagnosis
01348 / Literature
```

This display is displayed only with the fault reader V.A.G 1551.

Display definition: Interior monitoring warning lamp -K162 switch-off (in switch on B pillar).

The warning lamp in the deactivating switch on the B pillar flashes.

- Press ⇒key.

-> Indicated on display:

```
Final control diagnosis
Create active alarm
```

- The interior monitoring sensor transfers an alarm to the ATA system.

This results in an acoustic and optical alarm.

- Press ⇒key.

The alarm will be stopped by this action or you can unlock a vehicle door.

-> Indicated on display:

```
Final control diagnosis
End
```

- Press ⇒key.

The triggering range can be determined using measured value block 15 and table in convenience system (address word 46). In addition the warning lamp in the deactivation button will flash for approx. 1 minute.

Repeating the final control test is only possible after restarting the self-diagnosis.

-> Indicated on display:

```
Rapid data transfer      HELP
Select function XX
```

- Press keys -0- and -6- to end the output.

-> Indicated on display:

```
Rapid data transfer      Q
06 End output
```

- Confirm entry with the Q key.

-> Indicated on display:

```
Rapid data transfer      HELP
Enter address word XX
```

Protected by copyright. Copyright by Volkswagen AG. Copyright by Volkswagen AG. Volkswagen AG does not guarantee or accept any liability with respect to the correctness of information in this document. Copyright by Volkswagen AG. Reproduction in whole or in part is not permitted unless authorised by Volkswagen AG.
satelettronica

- Switch off ignition.
- Disconnect connector to fault reader V.A.G 1551.

4.11 - Reading measured value block

Special tools, testers and auxiliary items

- Fault reader V.A.G 1551 with cable V.A.G 1551/3

- Connecting fault reader => Page 63 .

The measured values in the functions read measured value block and basic setting are described during the individual component test. This table serves only as an overview.

The measured value block is divided into 3 display group numbers. The assignment of the individual display zones can be taken from the display group overview from page 71 .

-> Indicated on display:

```
Rapid data transfer      HELP
Select function XX
```

- Press keys -0- and -8- (08 initiates the "Read measured value block" function).

-> Indicated on display:

```
Rapid data transfer      Q
08 Read measured value block
```

- Confirm entry with the Q key.

-> Indicated on display:

```
Read measured value block      HELP
Input display group number XXX
```

The display group number 001 is an example, to illustrate the sequence.

- Press keys 0, 0 and 1 for "Display group number 1" and confirm entry with Q key.

-> Indicated on display:
(1...4 = Display zones)

```
Read measured value block      1
"
     1      2      3      4
```

Note:

To change to another display group proceed as follows:

Display group	V.A.G 1551	V.A.G 1552
Higher	Press key 3	Press ↑key
Lower	Press key 1	Press ↓key
Skip	Press key C	Press key C

- Displayed after pressing C key.

-> Indicated on display:

```
Read measured value block      HELP
Input display group number XXX
```

Protected by copyright. Copying for private or commercial purposes, in part or in whole, is not permitted unless authorised by Volkswagen AG. Volkswagen AG does not guarantee or accept any liability with respect to the correctness of information in this document. Copyright by Volkswagen AG.
satelettronica

- Now enter the display group number required.

4.12 - Display group overview

Break down of display content for display group number 001

Display group 001 -Driver's door-						
Read measured value block 1			⇒	◂ Indicated on display		
xxx	xxx	xxx				
1	2	3	4	◂ Display zone	Specification	Evaluation
				Button	operated, n. operated	=> Page 71
				Signal IM1)	on, off	
				Alarm detected	yes, no	
				Sensor status	activated inactive	

1) The IM sensor can be activated or deactivated via this wiring and contains information of terminal 15. The signals are controlled by the convenience system control unit.

Evaluating display group number 001

Display zone	Designation	Display	Rectifying fault
	Key switch driver's side	open closed not operated implausible	Visual check of wiring Check lock mechanism Check that connections of relevant current circuit are correctly connected and seated securely whilst simultaneously observing display If the display does not change when operating, rectify fault or renew relevant component Erase fault memory Perform functional check Interrogate fault memory again
	Alarm detected	yes, no	
	Signal IM1)	on, off	
	Button	operated, n. operated	

1) The IM sensor can be activated or deactivated via this wiring and contains information of terminal 15. The signals are controlled by the convenience system control unit.

Break down of display content for display group number 002

Display group 002 -Driver's door-						
Read measured value block 2			⇒	◂ Indicated on display		
xxx	xxx	xxx	xxx			
1	2	3	4	◂ Display zones	Specification	Evaluation
				Blank		
				Blank		

Copyright by Volkswagen AG. Volkswagen AG does not guarantee or accept any liability with respect to the correctness of information in this document. Copying for private or commercial purposes, in part or in whole, is not permitted unless authorised by Volkswagen AG.
Protected by copyright.
satelettronica

	Ignition1)	term. 15 on, term. 15 off	
	Voltage supply	Volt	

1) From switching the ignition off/on to the display switching over must only take a max. 70 seconds.

Evaluating display group number 002

Display zone	Description	Display	Rectifying fault
	Key switch driver's side	open closed not operated implausible	- Visual check of wiring Check lock mechanism Check that connections of relevant current circuit are correctly connected and seated securely whilst simultaneously observing display If the display does not change when operating, rectify fault or renew relevant component Erase fault memory Perform functional check Interrogate fault memory again
	Ignition1)	term. 15 on, term. 15 off	

1) From switching the ignition off/on to the display switching over must only take a max. 70 seconds.

Break down of display content for display group number 003

Display group 003 -Driver's door-						
Read measured value block 3			⇒	◂ Indicated on display		
xxx	xxx	xxx	xxx			
1	2	3	4	◂ Display zones	Specification	Evaluation
				Workshop code1)	Not relevant	
			Adaption value 31)		Not relevant	
		Adaption value 21)			Not relevant	
	Adaption value 11)				Not relevant	

1) This measured value block can be read but has no significance for service departments.

Protected by copyright. Copying for private or commercial purposes, in part or in whole, is not permitted unless authorised by Volkswagen AG. Volkswagen AG does not guarantee or accept any liability with respect to the correctness of information in this document. Copyright by Volkswagen AG.

satelettronica